Compal confidential

Schematics Document

Mobile Banias/Dothan uFCBGA/uFCPGA
with Intel ODEM_MCH RevB+ICH4-M
core logic

2003-09-01

REV:1.0

THIS SHEET OF ENGINEERING DRAWING IS THE PROPRIETARY PROPERTY OF COMPAL ELECTRONICS, INC. AND CONTAINS CONFIDENTIAL AND TRADE SECRET INFORMATION. THIS SHEET MAY NOT BE TRANSFERED FROM THE CUSTODY OF THE COMPETENT DIVISION OF R&D DEPARTMENT EXCEPT AS AUTHORIZED BY COMPAL ELECTRONICS, INC. NEITHER THIS SHEET NOR THE INFORMATION IT CONTAINS MAY BE USED BY OR DISCLOSED TO ANY THIRD PARTY WITHOUT PRIOR WRITTEN CONSENT OF COMPAL ELECTRONICS, INC.

Compal Electronics, Inc.		
Title	SCHEMATIC, M/B LA-1991	
Size	Document Number 401266	Rev 1A
Date: 星期五, 九月 05, 2003	Sheet 1 of 45	

Compal confidential

File Name : LA-1991

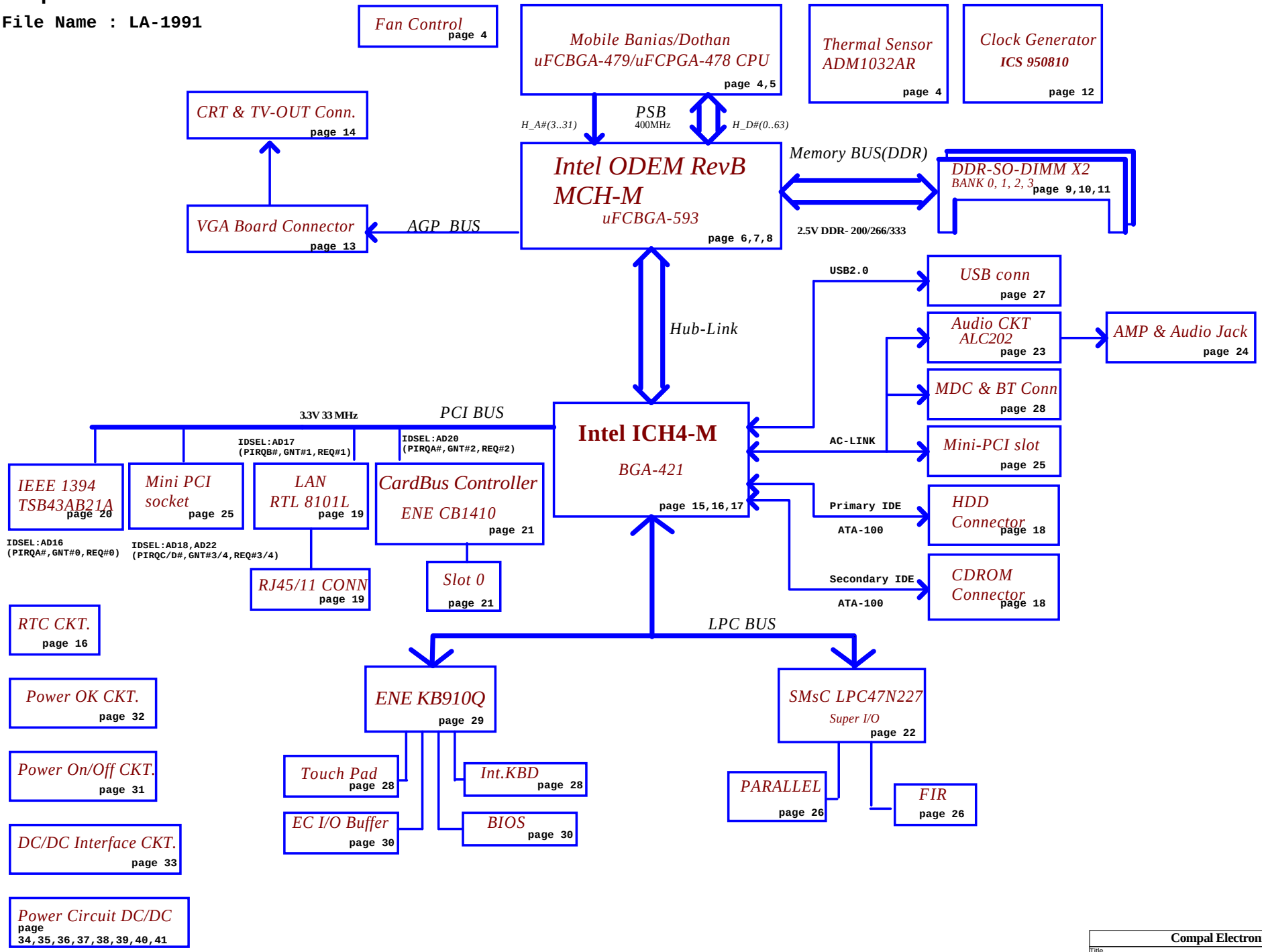

THIS SHEET OF ENGINEERING DRAWING IS THE PROPRIETARY PROPERTY OF COMPAL ELECTRONICS, INC. AND CONTAINS CONFIDENTIAL AND TRADE SECRET INFORMATION. THIS SHEET MAY NOT BE TRANSFERED FROM THE CUSTODY OF THE COMPETENT DIVISION OF R&D DEPARTMENT EXCEPT AS AUTHORIZED BY COMPAL ELECTRONICS, INC. NEITHER THIS SHEET NOR THE INFORMATION IT CONTAINS MAY BE USED BY OR DISCLOSED TO ANY THIRD PARTY WITHOUT PRIOR WRITTEN CONSENT OF COMPAL ELECTRONICS, INC.

Compal Electronics, Inc.		
Title: SCHEMATIC, M/B LA-1991		
Size	Document Number: 401266	Rev 1A
Date: 星期五, 九月 05, 2003	Sheet 2 of 45	

Voltage Rails

Power Plane	Description	S0-S1	S3	S5
VIN	Adapter power supply (19V)	N/A	N/A	N/A
B+	AC or battery power rail for power circuit	N/A	N/A	N/A
+CPU_CORE	Core voltage for CPU	ON	OFF	OFF
+VCCP	1.05V rail for Processor I/O	ON	OFF	OFF
+1.25VS	1.25V switched power rail for DDR Vtt	ON	OFF	OFF
+1.2VS	1.2V switched power rail for MCH core power	ON	OFF	OFF
+1.5VALW	1.5V always on power rail	ON	ON	ON*
+1.5VS	1.5V switched power rail for AGP interface	ON	OFF	OFF
+1.8VS	1.8V switched power rail for CPU PLL & Hub-Link	ON	OFF	OFF
+2.5V	2.5V power rail for DDR	ON	ON	OFF
+2.5VS	2.5V switched power rail	ON	OFF	OFF
+3VALW	3.3V always on power rail	ON	ON	ON*
+3V	3V power rail	ON	ON	OFF
+3VS	3.3V switched power rail	ON	OFF	OFF
+5VALW	5V always on power rail	ON	ON	ON*
+5V	5V power rail	ON	ON	OFF
+5VS	5V switched power rail	ON	OFF	OFF
+12VALW	12V always on power rail	ON	ON	ON*
+12V	12V power rail	ON	ON	OFF
+12VS	12Vswitched power rail on power rail	ON	OFF	OFF
RTCVCC	RTC power	ON	ON	ON

Note : ON* means that this power plane is ON only with AC power available, otherwise it is OFF.

Internal PCI Devices

DEVICE	PCI Device ID
HUB	D30
USB	D29
AC97 MODEM	D31
AC97	D31
ATA 100	D31
ETHERNET	D8 (AD24)
LPC I/F	D31
SMBUS	D31

External PCI Devices

DEVICE	PCI Device ID	IDSEL #	REQ/GNT #	PIRQ
1394	D0	AD16	0	A
LAN	D1	AD17	1	B
CARD BUS	D4	AD20	2	C
Wireless LAN	D2	AD18	3	D
Mini-PCI	D6	AD22	4	D
AGP BUS	N/A	AGP_DEVSEL#	N/A	A

I2C / SMBUS ADDRESSING

DEVICE	HEX	ADDRESS
DDR SO-DIMM 0	A0	1 0 1 0 0 0 0 X
DDR SO-DIMM 1	A2	1 0 1 0 0 0 1 X
CLOCK GENERATOR (EXT.)	D2	1 1 0 1 0 0 1 X

Symbol note:

:means digital ground.

:means analog ground.

@ :means reserved.

THIS SHEET OF ENGINEERING DRAWING IS THE PROPRIETARY PROPERTY OF COMPAL ELECTRONICS, INC. AND CONTAINS CONFIDENTIAL AND TRADE SECRET INFORMATION. THIS SHEET MAY NOT BE TRANSFERED FROM THE CUSTODY OF THE COMPETENT DIVISION OF R&D DEPARTMENT EXCEPT AS AUTHORIZED BY COMPAL ELECTRONICS, INC. NEITHER THIS SHEET NOR THE INFORMATION IT CONTAINS MAY BE USED BY OR DISCLOSED TO ANY THIRD PARTY WITHOUT PRIOR WRITTEN CONSENT OF COMPAL ELECTRONICS, INC.

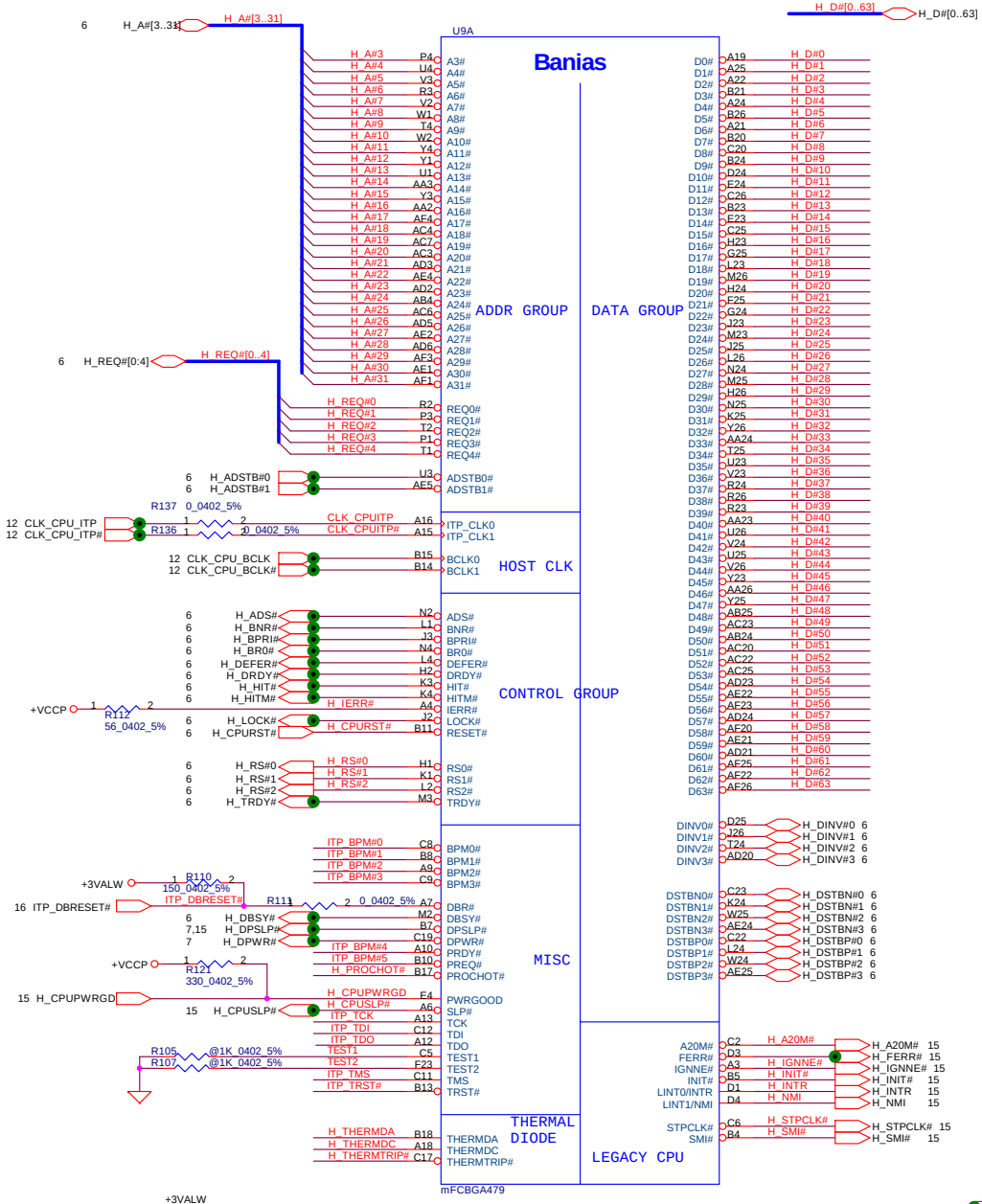

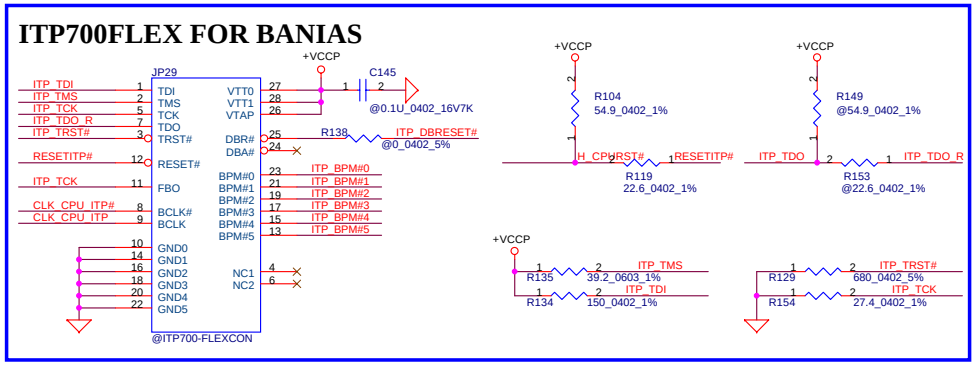

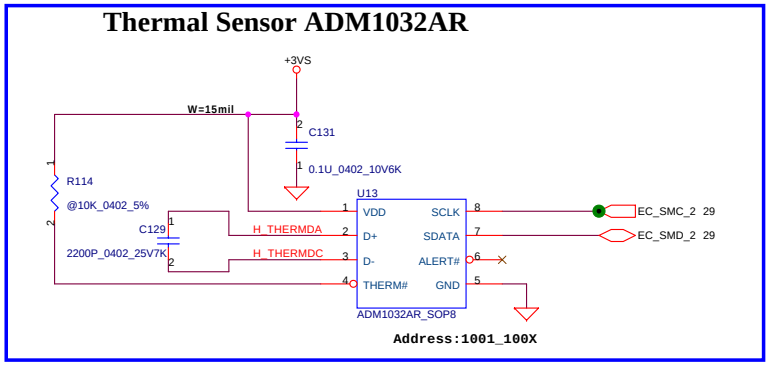

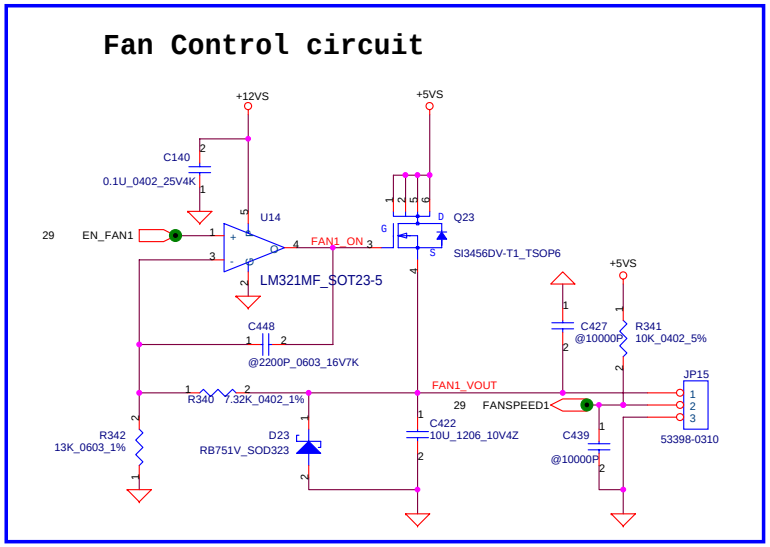

THIS SHEET OF ENGINEERING DRAWING IS THE PROPRIETARY PROPERTY OF COMPAL ELECTRONICS, INC. AND CONTAINS CONFIDENTIAL AND TRADE SECRET INFORMATION. THIS SHEET MAY NOT BE TRANSFERED FROM THE CUSTODY OF THE COMPETENT DIVISION OF R&D DEPARTMENT EXCEPT AS AUTHORIZED BY COMPAL ELECTRONICS, INC. NEITHER THIS SHEET NOR THE INFORMATION IT CONTAINS MAY BE USED BY OR DISCLOSED TO ANY THIRD PARTY WITHOUT PRIOR WRITTEN CONSENT OF COMPAL ELECTRONICS, INC.

Compal Electronics, Inc.			
Title: SCHEMATIC, M/B LA-1991			
Size	Document Number: 401266		Rev: 1A
Date: 星期五, 九月 05, 2003	Sheet 4 of 45		

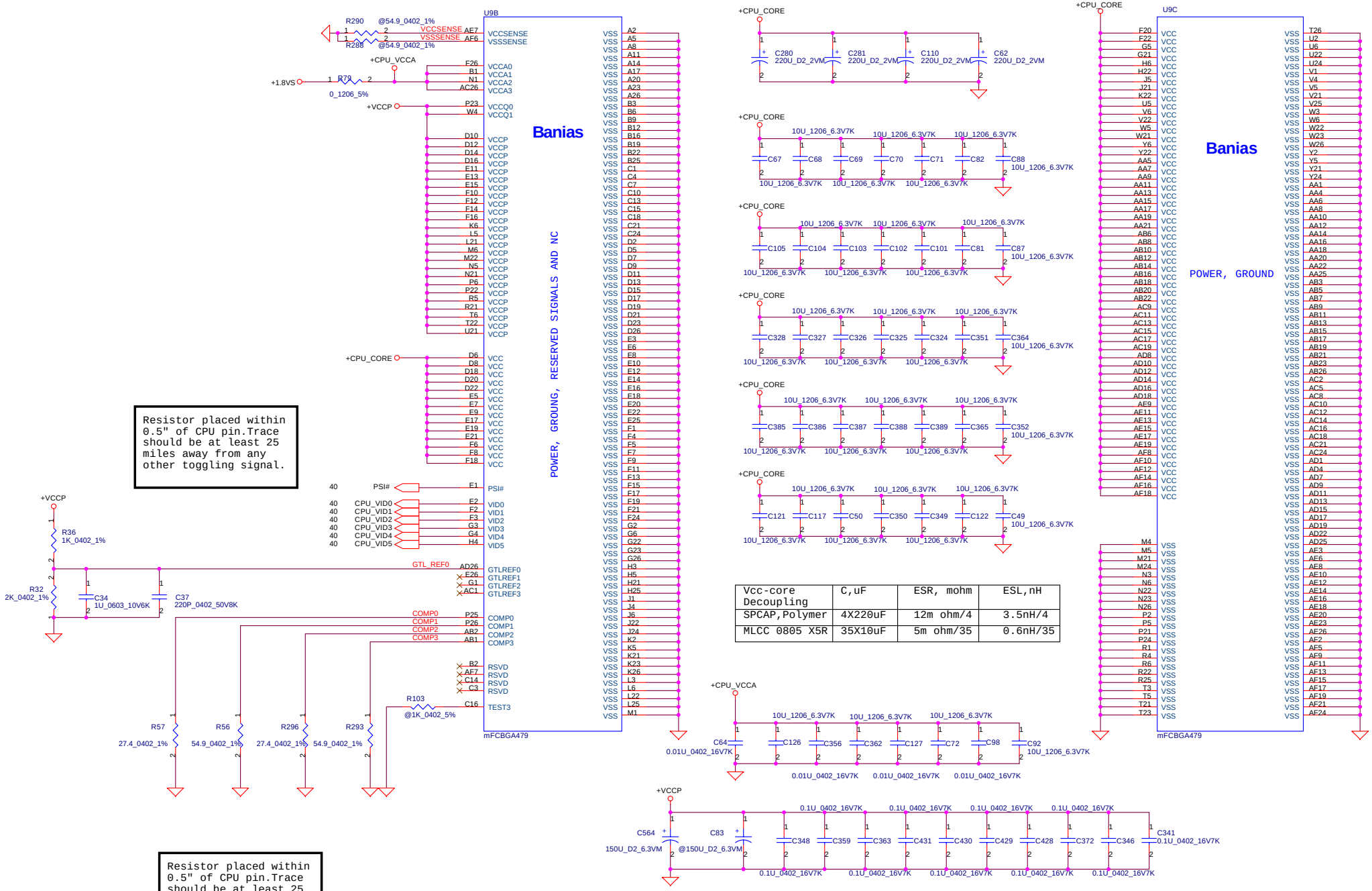

Resistor placed within 0.5" of CPU pin.Trace should be at least 25 miles away from any other toggling signal.

Resistor placed within 0.5" of CPU pin.Trace should be at least 25 miles away from any other toggling signal.

Vcc-core Decoupling	C,uF	ESR, mohm	ESL,nH
SPCAP,Polymer	4X220uF	12m ohm/4	3.5nH/4
MLCC 0805 X5R	35X10uF	5m ohm/35	0.6nH/35

THIS SHEET OF ENGINEERING DRAWING IS THE PROPRIETARY PROPERTY OF COMPAL ELECTRONICS, INC. AND CONTAINS CONFIDENTIAL AND TRADE SECRET INFORMATION. THIS SHEET MAY NOT BE TRANSFERED FROM THE CUSTODY OF THE COMPETENT DIVISION OF R&D DEPARTMENT EXCEPT AS AUTHORIZED BY COMPAL ELECTRONICS, INC. NEITHER THIS SHEET NOR THE INFORMATION IT CONTAINS MAY BE USED BY OR DISCLOSED TO ANY THIRD PARTY WITHOUT PRIOR WRITTEN CONSENT OF COMPAL ELECTRONICS, INC.

Compal Electronics, Inc.

Title: **SCHEMATIC, M/B LA-1991**

Size | Document Number: **401266** | Rev: 1A

Date: 星期五, 九月 05, 2003 | Sheet 5 of 45

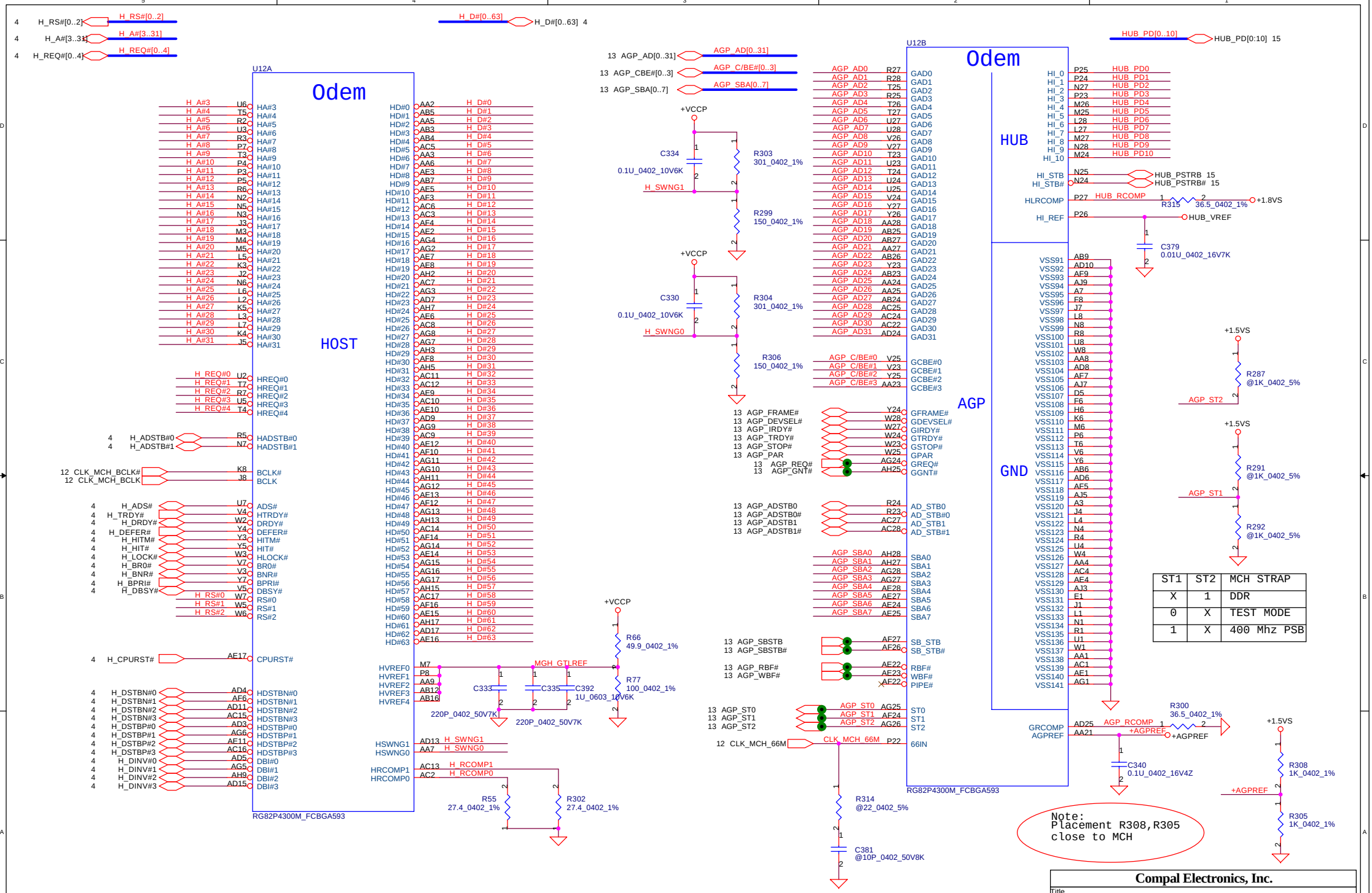

ST1	ST2	MCH STRAP
X	1	DDR
0	X	TEST MODE
1	X	400 Mhz PSB

THIS SHEET OF ENGINEERING DRAWING IS THE PROPRIETARY PROPERTY OF COMPAL ELECTRONICS, INC. AND CONTAINS CONFIDENTIAL AND TRADE SECRET INFORMATION. THIS SHEET MAY NOT BE TRANSFERED FROM THE CUSTODY OF THE COMPETENT DIVISION OF R&D DEPARTMENT EXCEPT AS AUTHORIZED BY COMPAL ELECTRONICS, INC. NEITHER THIS SHEET NOR THE INFORMATION IT CONTAINS MAY BE USED BY OR DISCLOSED TO ANY THIRD PARTY WITHOUT PRIOR WRITTEN CONSENT OF COMPAL ELECTRONICS, INC.

Compal Electronics, Inc.

Title: **SCHEMATIC, M/B LA-1991**

Size | Document Number: **401266** | Rev: 1A

Date: 星期五, 九 ?05, 2003 | Sheet 6 of 45

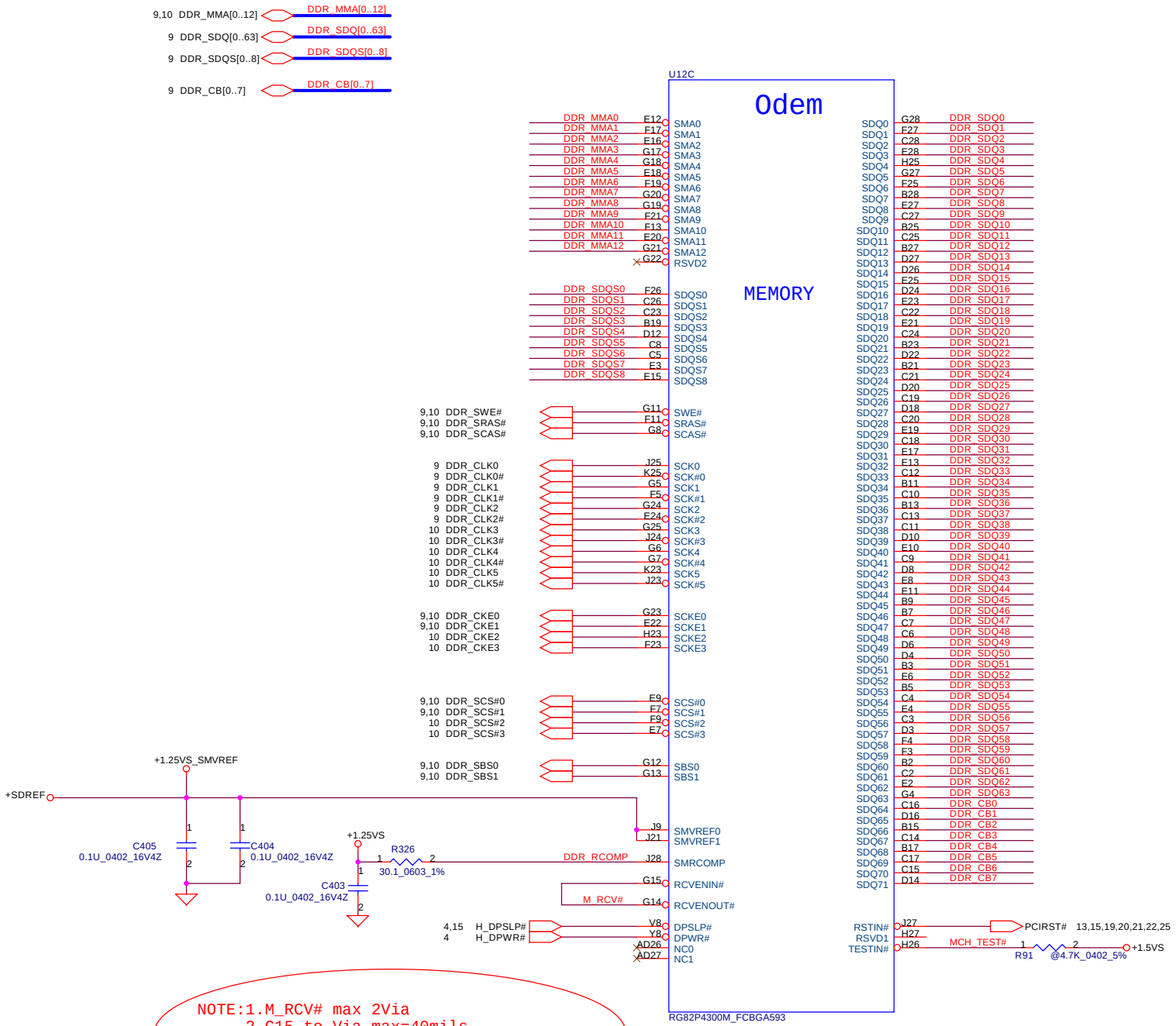

NOTE:1.M_RCV# max 2Via
2.G15 to Via max=40mils
3.G14 to Via max=40mils
4.Via to Via must = 100mils +-5mils

THIS SHEET OF ENGINEERING DRAWING IS THE PROPRIETARY PROPERTY OF COMPAL ELECTRONICS, INC. AND CONTAINS CONFIDENTIAL AND TRADE SECRET INFORMATION. THIS SHEET MAY NOT BE TRANSFERED FROM THE CUSTODY OF THE COMPETENT DIVISION OF R&D DEPARTMENT EXCEPT AS AUTHORIZED BY COMPAL ELECTRONICS, INC. NEITHER THIS SHEET NOR THE INFORMATION IT CONTAINS MAY BE USED BY OR DISCLOSED TO ANY THIRD PARTY WITHOUT PRIOR WRITTEN CONSENT OF COMPAL ELECTRONICS, INC.

Compal Electronics, Inc.

Title: SCHEMATIC, M/B LA-1991

Size | Document Number: 401266 | Rev 1A

Date: 星期五, 九月 05, 2003 | Sheet 7 of 45

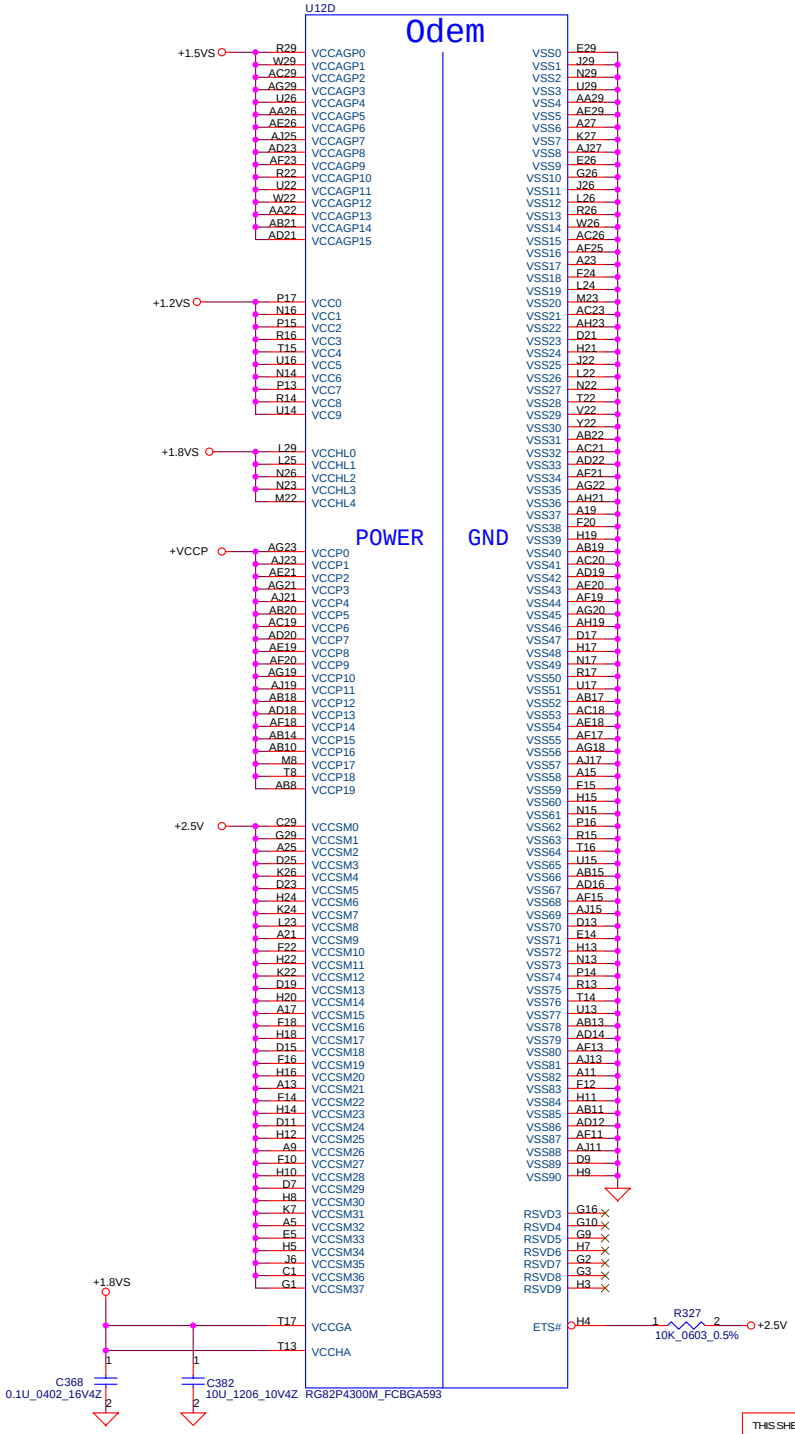

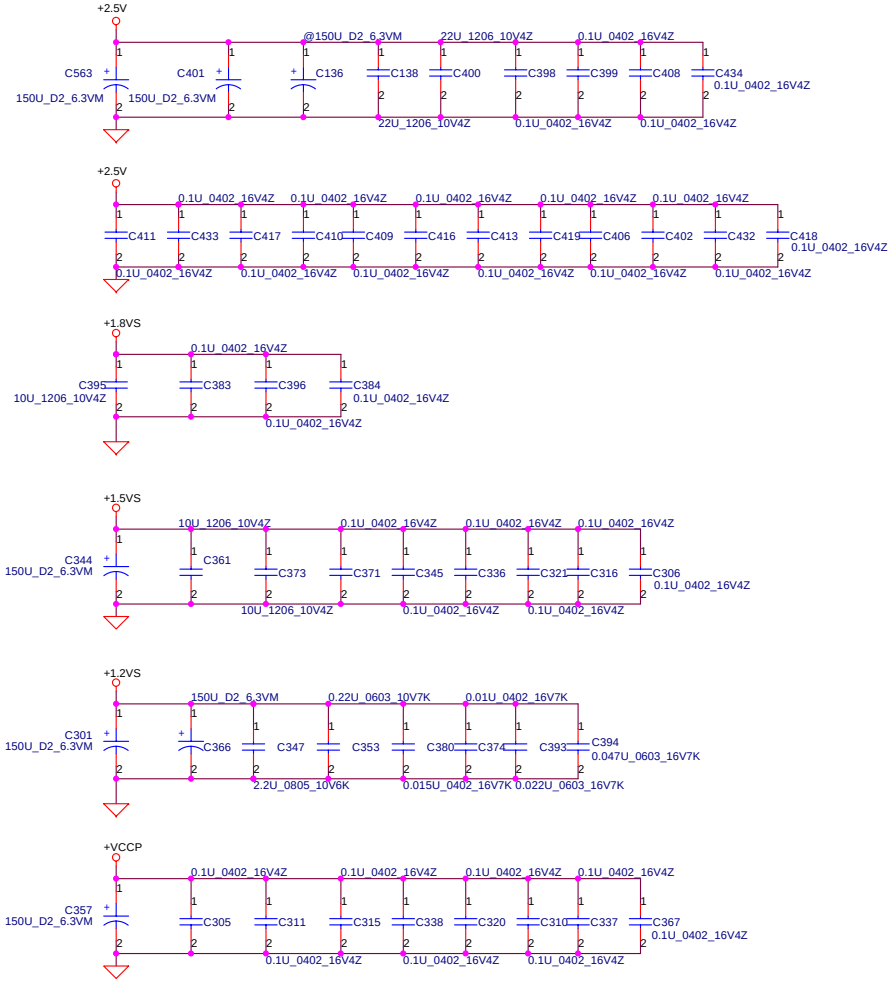

THIS SHEET OF ENGINEERING DRAWING IS THE PROPRIETARY PROPERTY OF COMPAL ELECTRONICS, INC. AND CONTAINS CONFIDENTIAL AND TRADE SECRET INFORMATION. THIS SHEET MAY NOT BE TRANSFERED FROM THE CUSTODY OF THE COMPETENT DIVISION OF R&D DEPARTMENT EXCEPT AS AUTHORIZED BY COMPAL ELECTRONICS, INC. NEITHER THIS SHEET NOR THE INFORMATION IT CONTAINS MAY BE USED BY OR DISCLOSED TO ANY THIRD PARTY WITHOUT PRIOR WRITTEN CONSENT OF COMPAL ELECTRONICS, INC.

Compal Electronics, Inc.

Title: SCHEMATIC, M/B LA-1991

Size | Document Number: 401266 | Rev: 1A

Date: 星期五, 九月 05, 2003 | Sheet 8 of 45

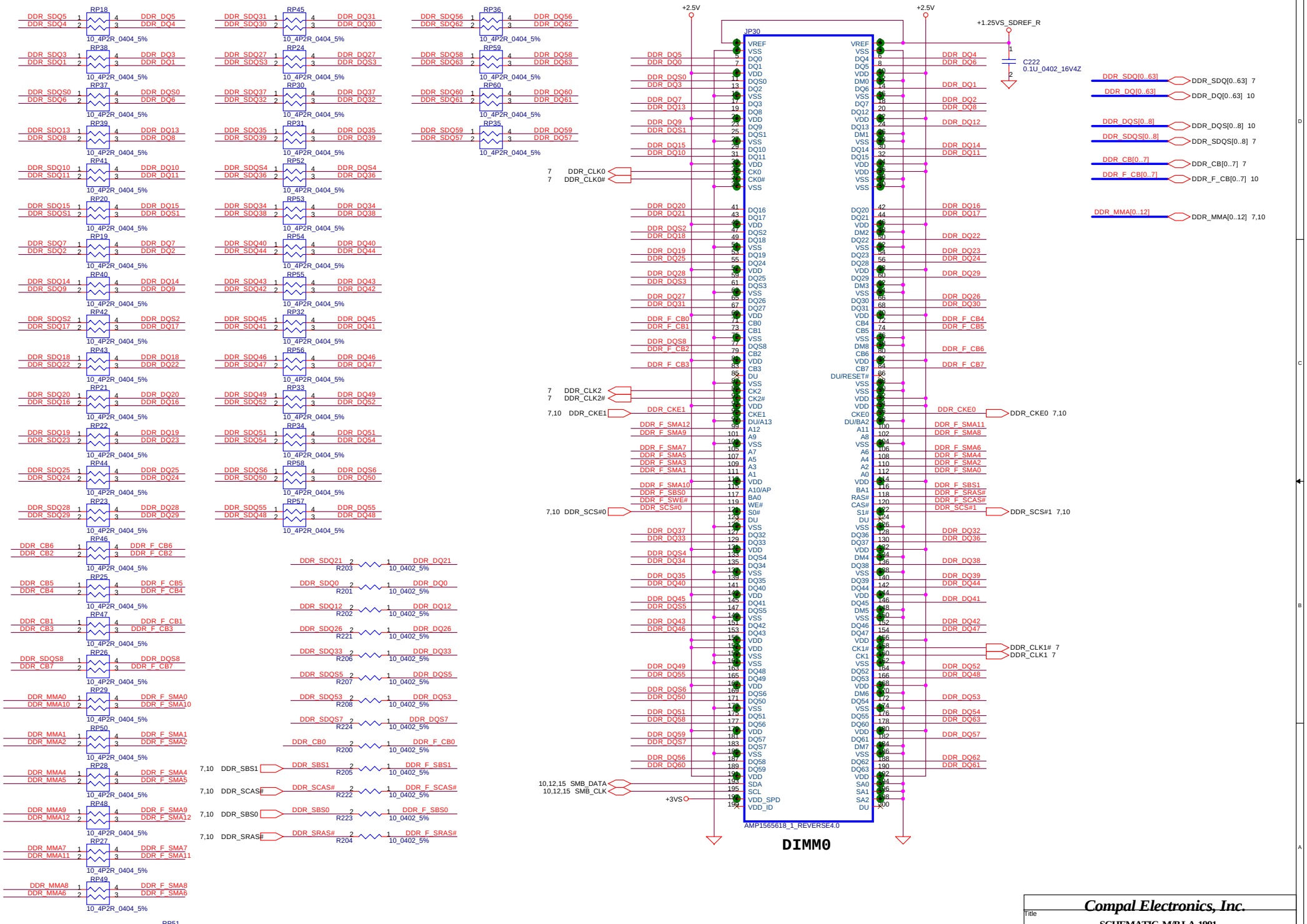

THIS SHEET OF ENGINEERING DRAWING IS THE PROPRIETARY PROPERTY OF COMPAL ELECTRONICS, INC. AND CONTAINS CONFIDENTIAL AND TRADE SECRET INFORMATION. THIS SHEET MAY NOT BE TRANSFERED FROM THE CUSTODY OF THE COMPETENT DIVISION OF R&D DEPARTMENT EXCEPT AS AUTHORIZED BY COMPAL ELECTRONICS, INC. NEITHER THIS SHEET NOR THE INFORMATION IT CONTAINS MAY BE USED BY OR DISCLOSED TO ANY THIRD PARTY WITHOUT PRIOR WRITTEN CONSENT OF COMPAL ELECTRONICS, INC.

Compal Electronics, Inc.

Title: SCHEMATIC, M/B LA-1991

Size	Document Number	Rev
	401266	1A

Date: 星期五, 九月 05, 2003 Sheet 9 of 45

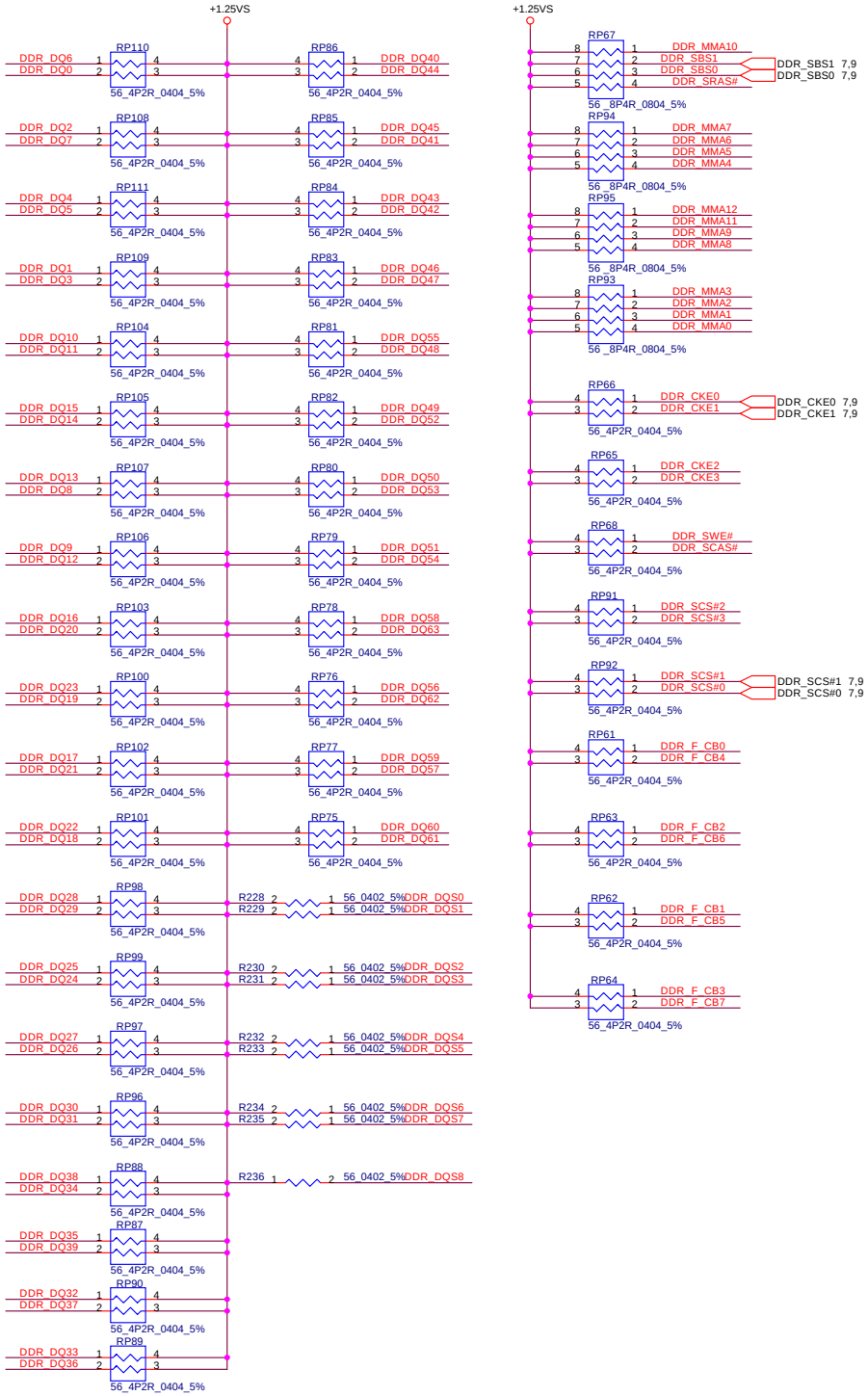

DIMM1

THIS SHEET OF ENGINEERING DRAWING IS THE PROPRIETARY PROPERTY OF COMPAL ELECTRONICS, INC. AND CONTAINS CONFIDENTIAL AND TRADE SECRET INFORMATION. THIS SHEET MAY NOT BE TRANSFERED FROM THE CUSTODY OF THE COMPETENT DIVISION OF R&D DEPARTMENT EXCEPT AS AUTHORIZED BY COMPAL ELECTRONICS, INC. NEITHER THIS SHEET NOR THE INFORMATION IT CONTAINS MAY BE USED BY OR DISCLOSED TO ANY THIRD PARTY WITHOUT PRIOR WRITTEN CONSENT OF COMPAL ELECTRONICS, INC.

Compal Electronics, Inc.

Title: SCHEMATIC, M/B LA-1991

Size | Document Number: 401266 | Rev: 1A

Date: 星期五, 九月 05, 2003 | Sheet 10 of 45

Layout note :

Distribute as close as possible to DDR-SODIMM.

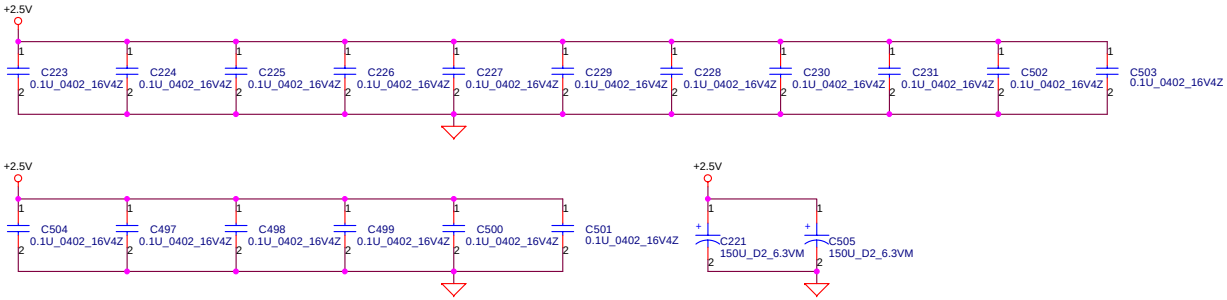

Layout note :

Place one cap close to every 2 pull up resistors termination to +1.25V

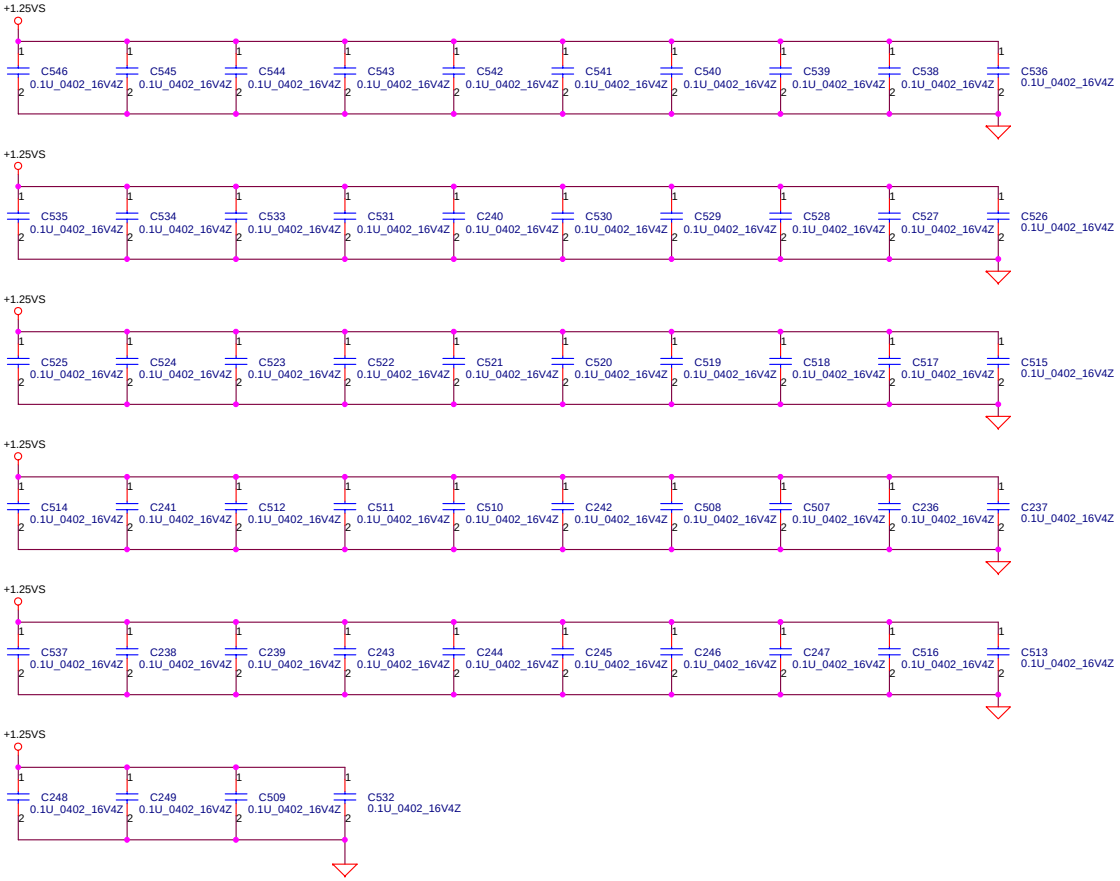

THIS SHEET OF ENGINEERING DRAWING IS THE PROPRIETARY PROPERTY OF COMPAL ELECTRONICS, INC. AND CONTAINS CONFIDENTIAL AND TRADE SECRET INFORMATION. THIS SHEET MAY NOT BE TRANSFERED FROM THE CUSTODY OF THE COMPETENT DIVISION OF R&D DEPARTMENT EXCEPT AS AUTHORIZED BY COMPAL ELECTRONICS, INC. NEITHER THIS SHEET NOR THE INFORMATION IT CONTAINS MAY BE USED BY OR DISCLOSED TO ANY THIRD PARTY WITHOUT PRIOR WRITTEN CONSENT OF COMPAL ELECTRONICS, INC.

Compal Electronics, Inc.		
Title: SCHEMATIC, M/B LA-1991		
Size	Document Number: 401266	Rev 1A
Date: 星期五, 九月 05, 2003	Sheet 11 of 45	

Clock Generator

SEL2	SEL1	SEL0	CPUCLKC[0..2]	CPUCLKT[0..2]
0	0	0	166.67	166.67
0	**0**	**1**	**100.00**	**100.00**
0	1	0	200.00	200.00
0	1	1	133.33	133.33

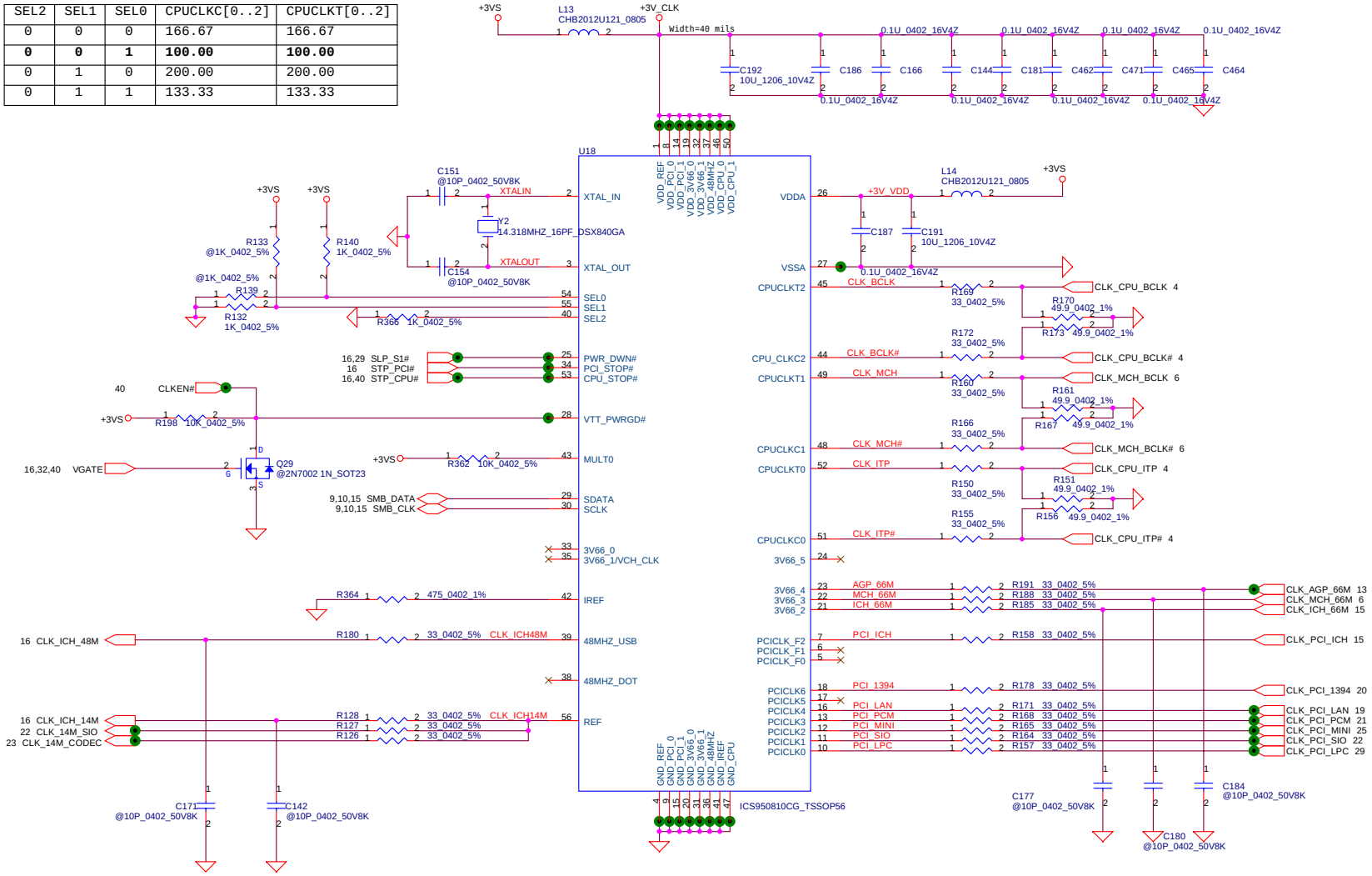

THIS SHEET OF ENGINEERING DRAWING IS THE PROPRIETARY PROPERTY OF COMPAL ELECTRONICS, INC. AND CONTAINS CONFIDENTIAL AND TRADE SECRET INFORMATION. THIS SHEET MAY NOT BE TRANSFERED FROM THE CUSTODY OF THE COMPETENT DIVISION OF R&D DEPARTMENT EXCEPT AS AUTHORIZED BY COMPAL ELECTRONICS, INC. NEITHER THIS SHEET NOR THE INFORMATION IT CONTAINS MAY BE USED BY OR DISCLOSED TO ANY THIRD PARTY WITHOUT PRIOR WRITTEN CONSENT OF COMPAL ELECTRONICS, INC.

Compal Electronics, Inc.

Title: SCHEMATIC, M/B LA-1991

Size | Document Number: 401266 | Rev: 1A

Date: 星期五, 九月 05, 2003 | Sheet 12 of 45

AGP CONN

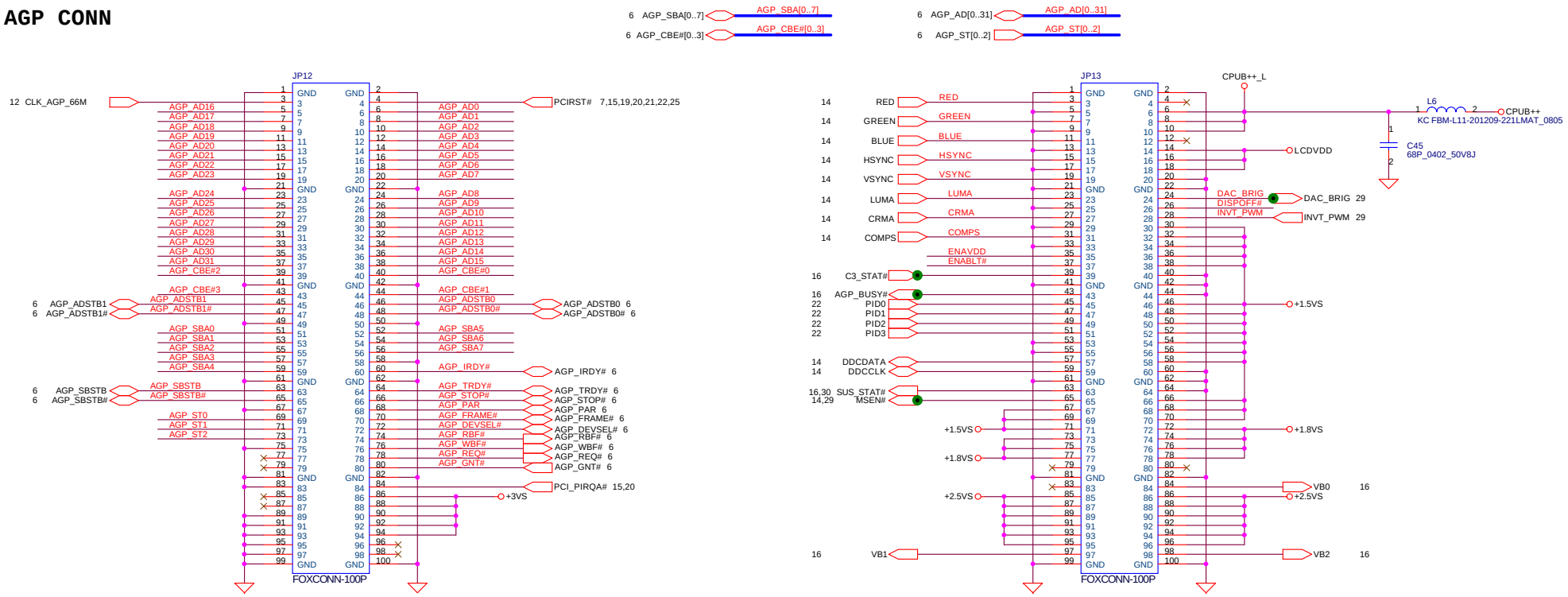

LCD POWER CIRCUIT

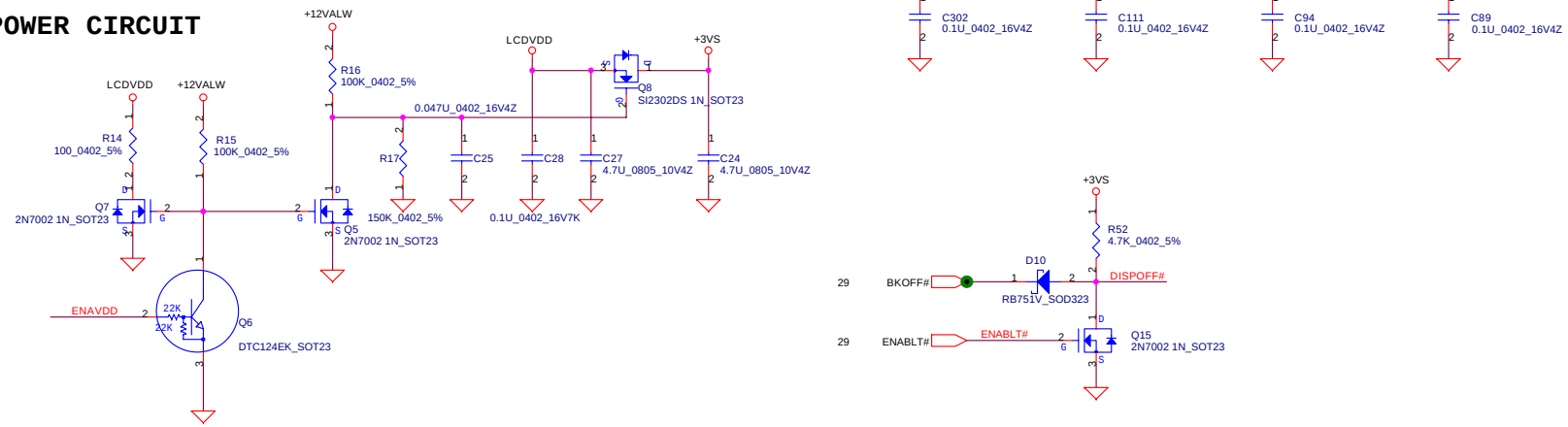

THIS SHEET OF ENGINEERING DRAWING IS THE PROPRIETARY PROPERTY OF COMPAL ELECTRONICS, INC. AND CONTAINS CONFIDENTIAL AND TRADE SECRET INFORMATION. THIS SHEET MAY NOT BE TRANSFERED FROM THE CUSTODY OF THE COMPETENT DIVISION OF R&D DEPARTMENT EXCEPT AS AUTHORIZED BY COMPAL ELECTRONICS, INC. NEITHER THIS SHEET NOR THE INFORMATION IT CONTAINS MAY BE USED BY OR DISCLOSED TO ANY THIRD PARTY WITHOUT PRIOR WRITTEN CONSENT OF COMPAL ELECTRONICS, INC.

Compal Electronics, Inc.	
Title	SCHEMATIC, M/B LA-1991
Size: Custom	Document Number: 401266
Rev	1A
Date: 星期五, 九月 05, 2003	Sheet 13 of 45

CRT Connector

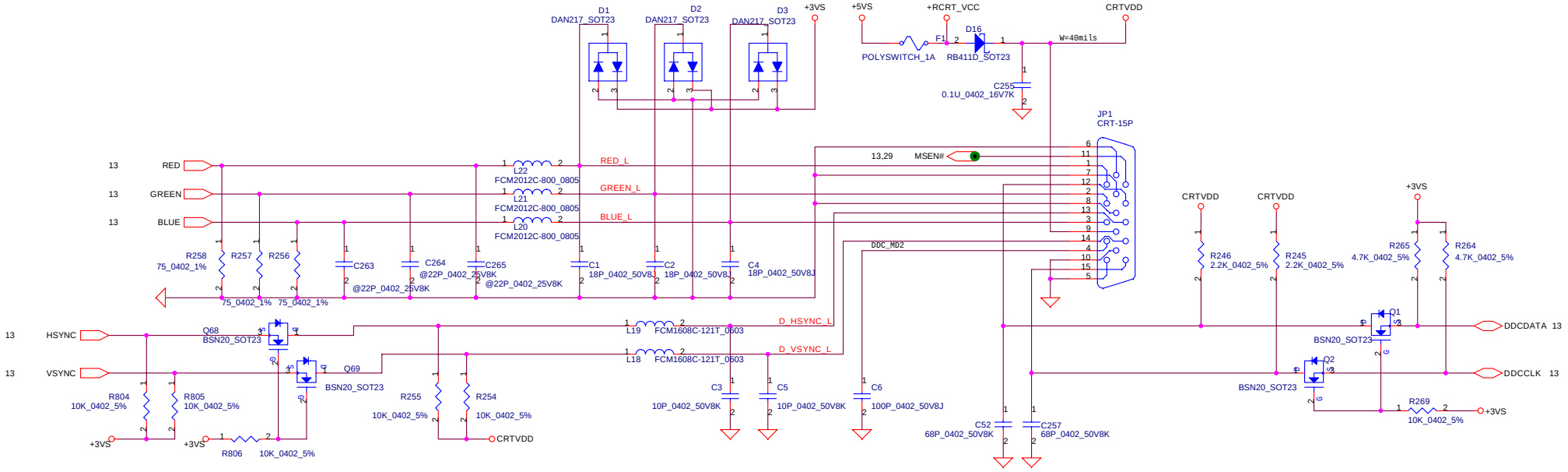

TV-Out Connector

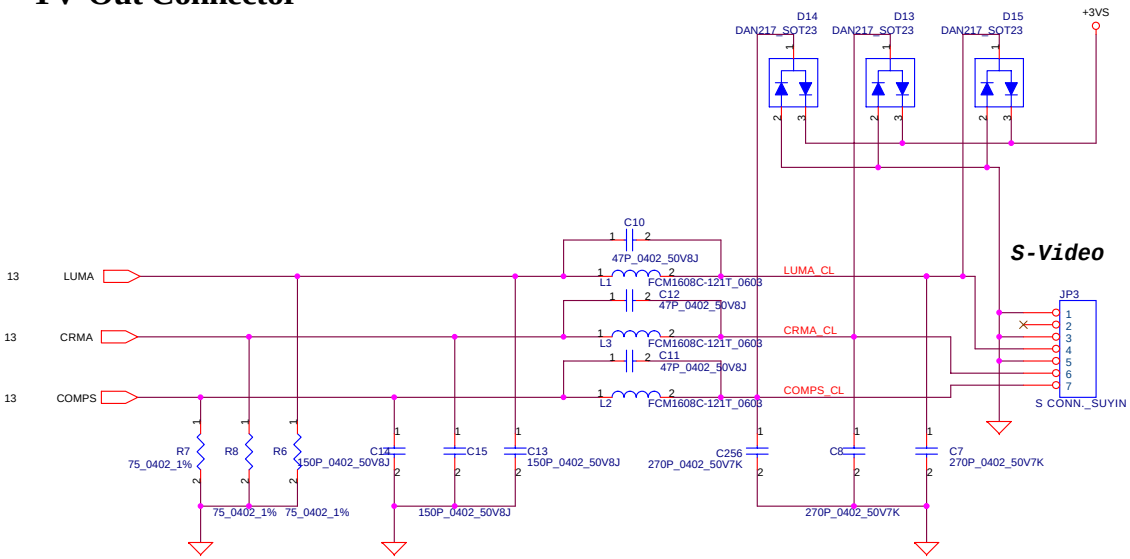

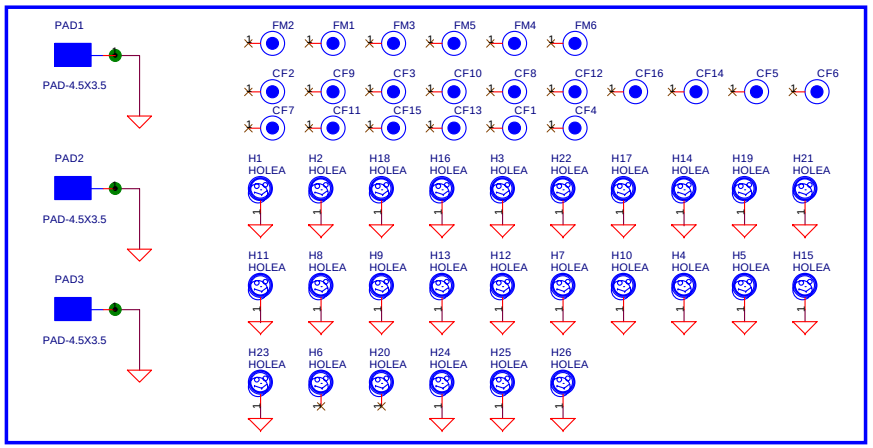

THIS SHEET OF ENGINEERING DRAWING IS THE PROPRIETARY PROPERTY OF COMPAL ELECTRONICS, INC. AND CONTAINS CONFIDENTIAL AND TRADE SECRET INFORMATION. THIS SHEET MAY NOT BE TRANSFERED FROM THE CUSTODY OF THE COMPETENT DIVISION OF R&D DEPARTMENT EXCEPT AS AUTHORIZED BY COMPAL ELECTRONICS, INC. NEITHER THIS SHEET NOR THE INFORMATION IT CONTAINS MAY BE USED BY OR DISCLOSED TO ANY THIRD PARTY WITHOUT PRIOR WRITTEN CONSENT OF COMPAL ELECTRONICS, INC.

Compal Electronics, Inc.	
Title	SCHEMATIC, M/B LA-1991
Size	Document Number 401266 — Rev 1A
Date: 星期五, 九月 05, 2003	Sheet 14 of 45

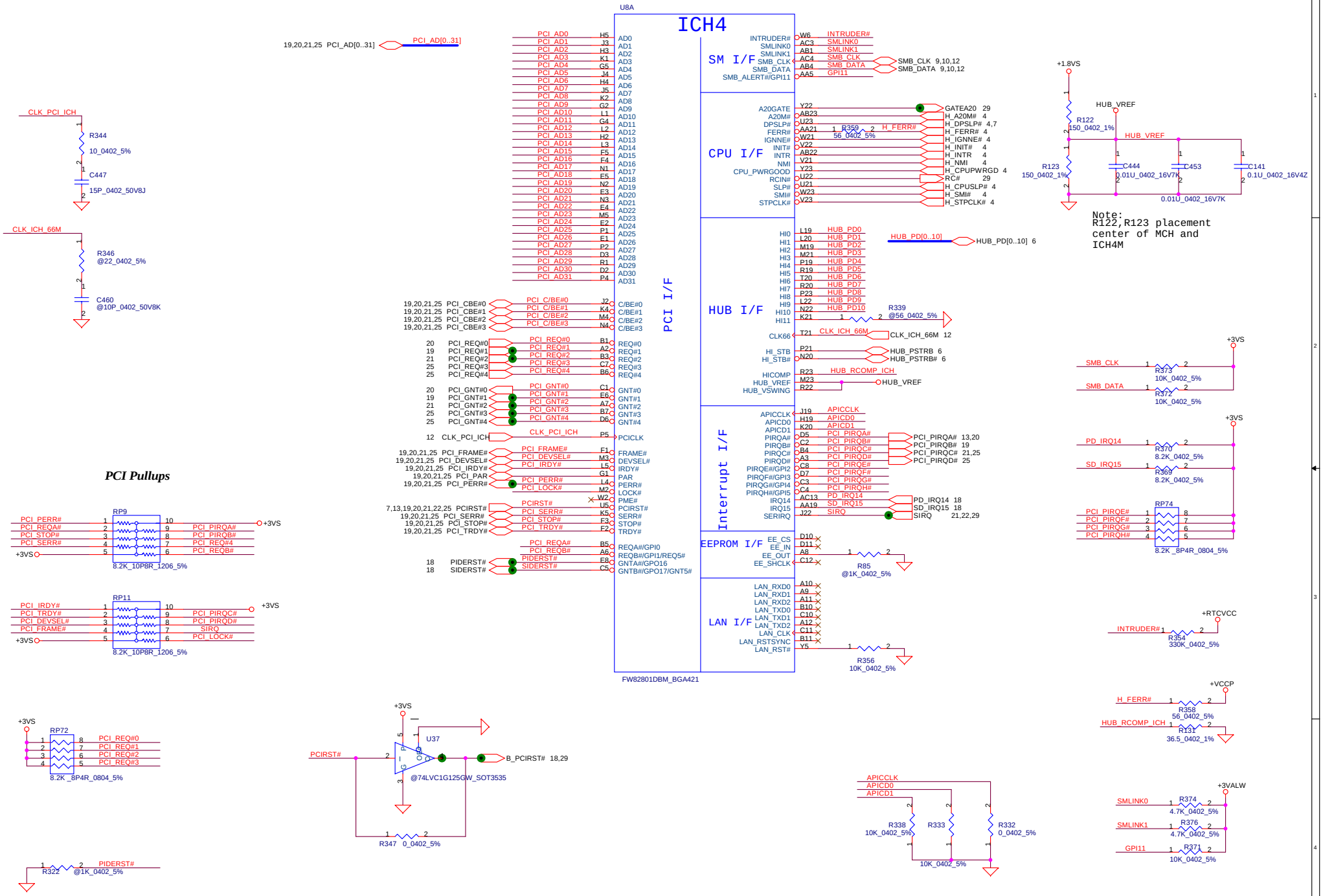

THIS SHEET OF ENGINEERING DRAWING IS THE PROPRIETARY PROPERTY OF COMPAL ELECTRONICS, INC. AND CONTAINS CONFIDENTIAL AND TRADE SECRET INFORMATION. THIS SHEET MAY NOT BE TRANSFERED FROM THE CUSTODY OF THE COMPETENT DIVISION OF R&D DEPARTMENT EXCEPT AS AUTHORIZED BY COMPAL ELECTRONICS, INC. NEITHER THIS SHEET NOR THE INFORMATION IT CONTAINS MAY BE USED BY OR DISCLOSED TO ANY THIRD PARTY WITHOUT PRIOR WRITTEN CONSENT OF COMPAL ELECTRONICS, INC.

Compal Electronics, Inc.

Title: SCHEMATIC, M/B LA-1991

Size	Document Number	Rev
	401266	1A

Date: 星期五, 九月 05, 2003 Sheet 15 of 45

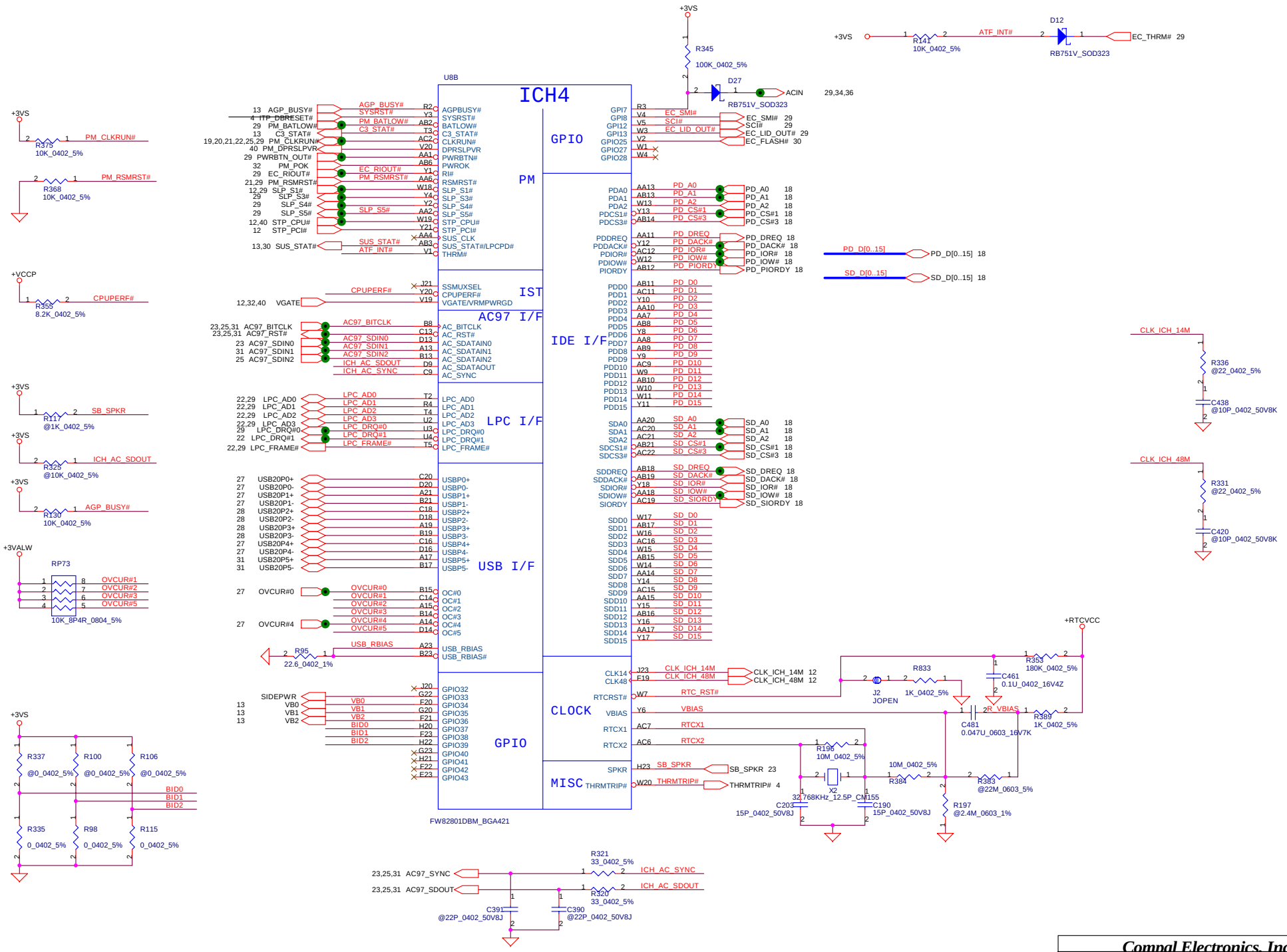

THIS SHEET OF ENGINEERING DRAWING IS THE PROPRIETARY PROPERTY OF COMPAL ELECTRONICS, INC. AND CONTAINS CONFIDENTIAL AND TRADE SECRET INFORMATION. THIS SHEET MAY NOT BE TRANSFERED FROM THE CUSTODY OF THE COMPETENT DIVISION OF R&D DEPARTMENT EXCEPT AS AUTHORIZED BY COMPAL ELECTRONICS, INC. NEITHER THIS SHEET NOR THE INFORMATION IT CONTAINS MAY BE USED BY OR DISCLOSED TO ANY THIRD PARTY WITHOUT PRIOR WRITTEN CONSENT OF COMPAL ELECTRONICS, INC.

Compal Electronics, Inc.

Title: SCHEMATIC, M/B LA-1991

Size	Document Number	Rev
	401266	1A

Date: 星期五, 九月 05, 2003 Sheet 16 of 45

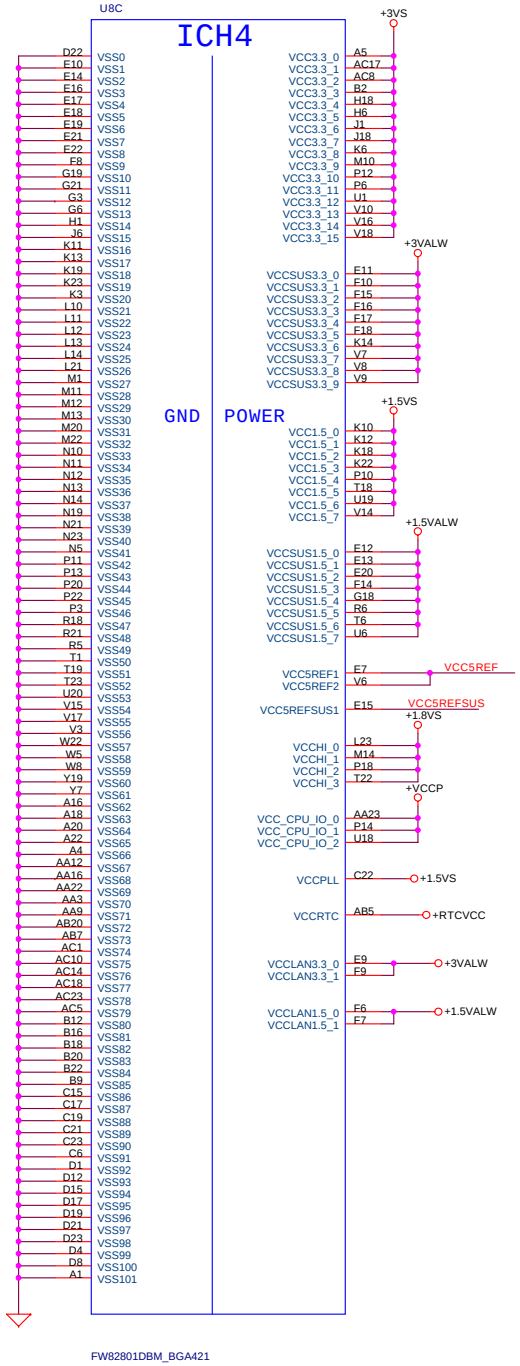

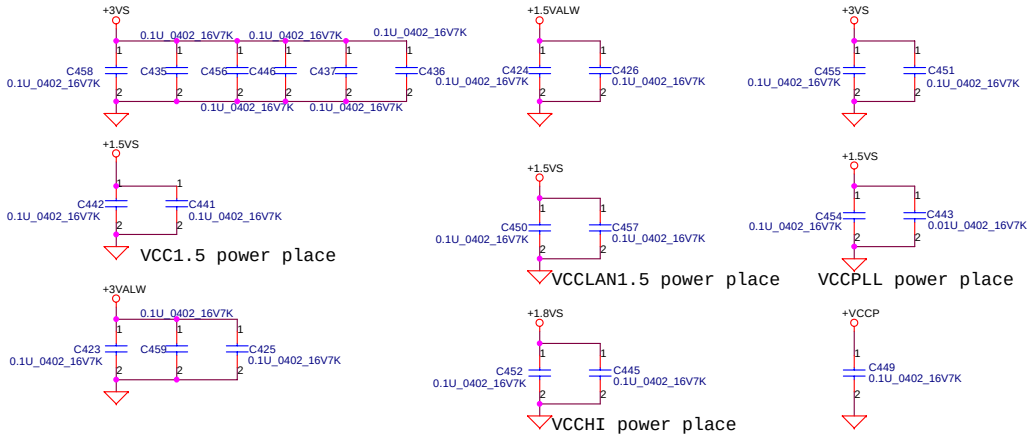

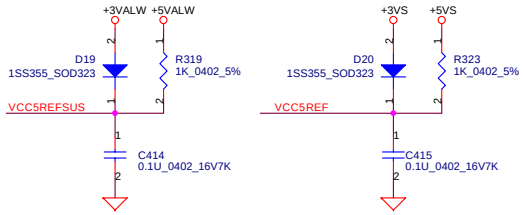

RTC Battery

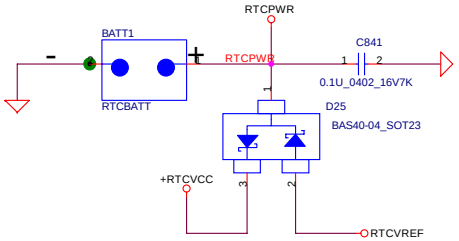

THIS SHEET OF ENGINEERING DRAWING IS THE PROPRIETARY PROPERTY OF COMPAL ELECTRONICS, INC. AND CONTAINS CONFIDENTIAL AND TRADE SECRET INFORMATION. THIS SHEET MAY NOT BE TRANSFERED FROM THE CUSTODY OF THE COMPETENT DIVISION OF R&D DEPARTMENT EXCEPT AS AUTHORIZED BY COMPAL ELECTRONICS, INC. NEITHER THIS SHEET NOR THE INFORMATION IT CONTAINS MAY BE USED BY OR DISCLOSED TO ANY THIRD PARTY WITHOUT PRIOR WRITTEN CONSENT OF COMPAL ELECTRONICS, INC.

Compal Electronics, Inc.

Title: SCHEMATIC, M/B LA-1991

Size | Document Number: 401266 | Rev: 1A

Date: 星期五, 九月 05, 2003 | Sheet 17 of 45

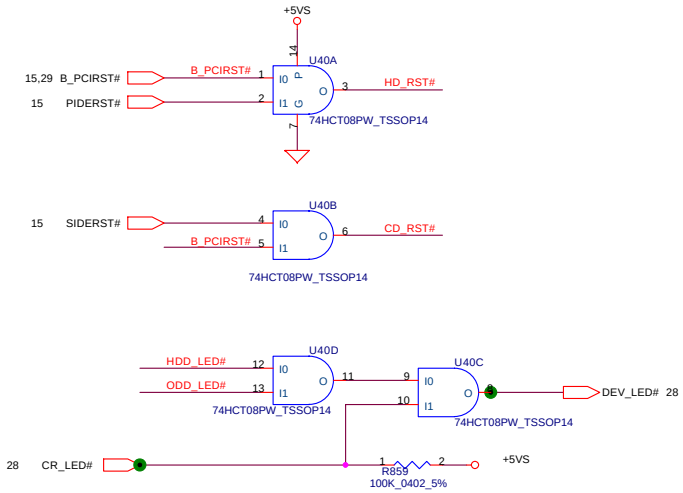

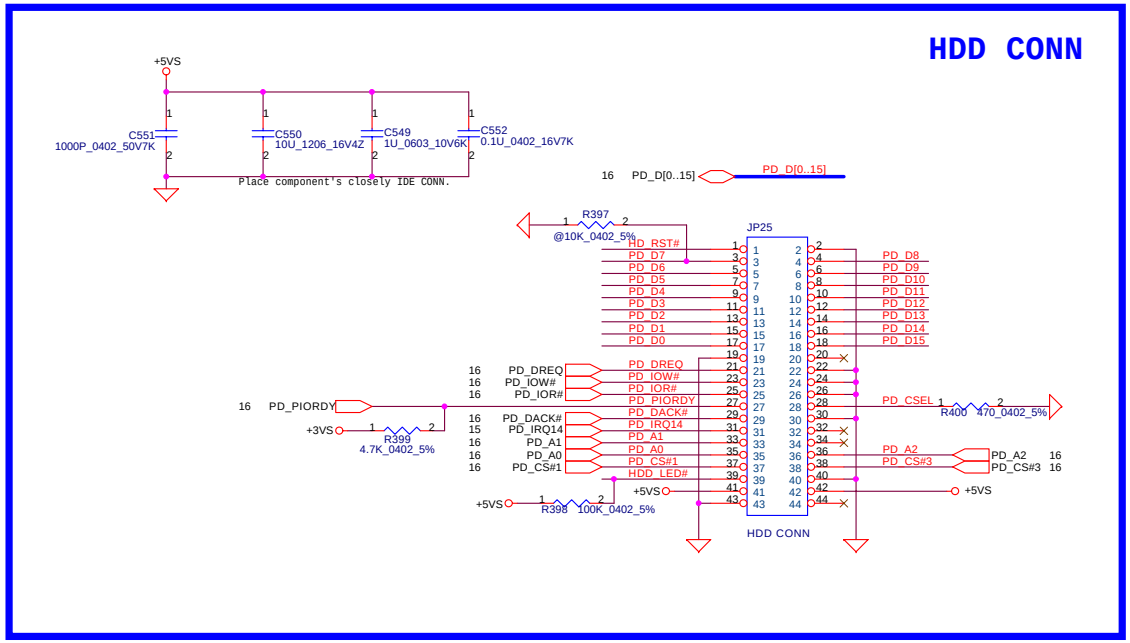

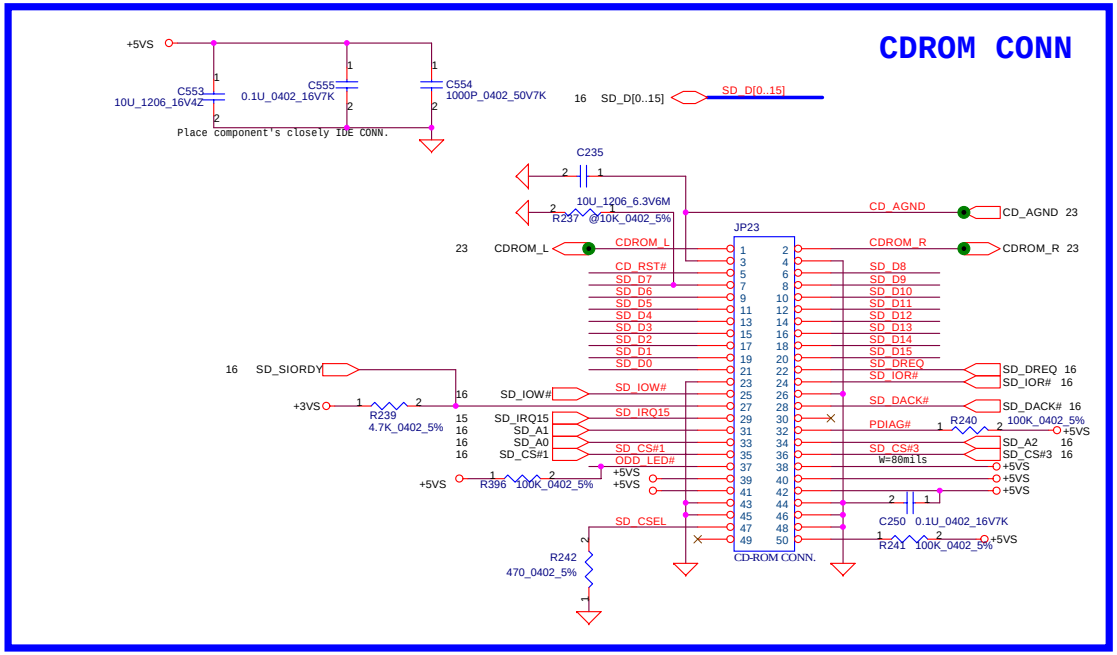

THIS SHEET OF ENGINEERING DRAWING IS THE PROPRIETARY PROPERTY OF COMPAL ELECTRONICS, INC. AND CONTAINS CONFIDENTIAL AND TRADE SECRET INFORMATION. THIS SHEET MAY NOT BE TRANSFERED FROM THE CUSTODY OF THE COMPETENT DIVISION OF R&D DEPARTMENT EXCEPT AS AUTHORIZED BY COMPAL ELECTRONICS, INC. NEITHER THIS SHEET NOR THE INFORMATION IT CONTAINS MAY BE USED BY OR DISCLOSED TO ANY THIRD PARTY WITHOUT PRIOR WRITTEN CONSENT OF COMPAL ELECTRONICS, INC.

Compal Electronics, Inc.	
Title	SCHEMATIC, M/B LA-1991
Size	Document Number 401266
Rev	1A
Date: 星期五, 九月 05, 2003	Sheet 18 of 45

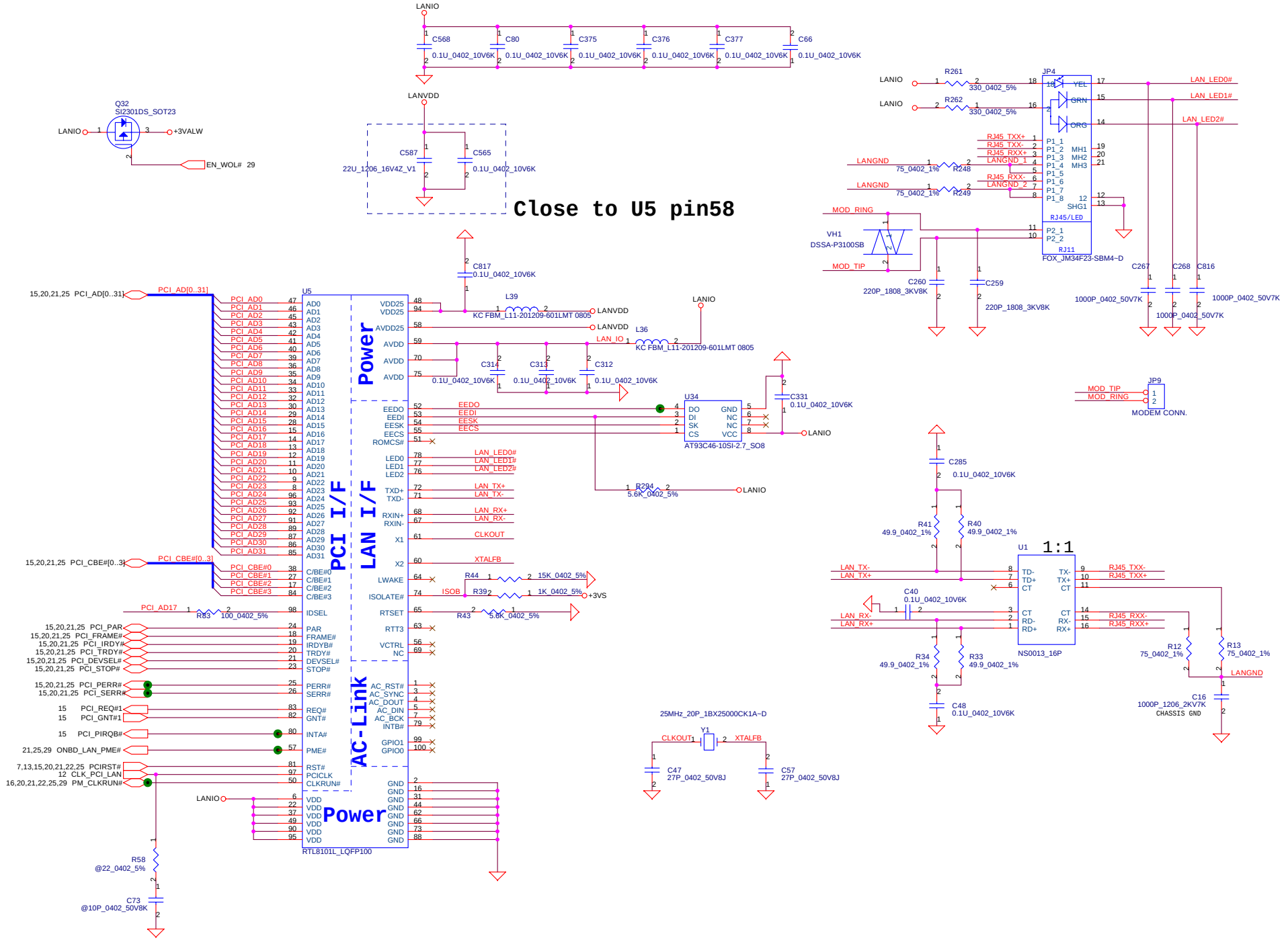

THIS SHEET OF ENGINEERING DRAWING IS THE PROPRIETARY PROPERTY OF COMPAL ELECTRONICS, INC. AND CONTAINS CONFIDENTIAL AND TRADE SECRET INFORMATION. THIS SHEET MAY NOT BE TRANSFERED FROM THE CUSTODY OF THE COMPETENT DIVISION OF R&D DEPARTMENT EXCEPT AS AUTHORIZED BY COMPAL ELECTRONICS, INC. NEITHER THIS SHEET NOR THE INFORMATION IT CONTAINS MAY BE USED BY OR DISCLOSED TO ANY THIRD PARTY WITHOUT PRIOR WRITTEN CONSENT OF COMPAL ELECTRONICS, INC.

Compal Electronics, Inc.

Title: SCHEMATIC, M/B LA-1991

Size	Document Number	Rev
	401266	1A

Date: 星期五, 九月 05, 2003 | Sheet 19 of 45

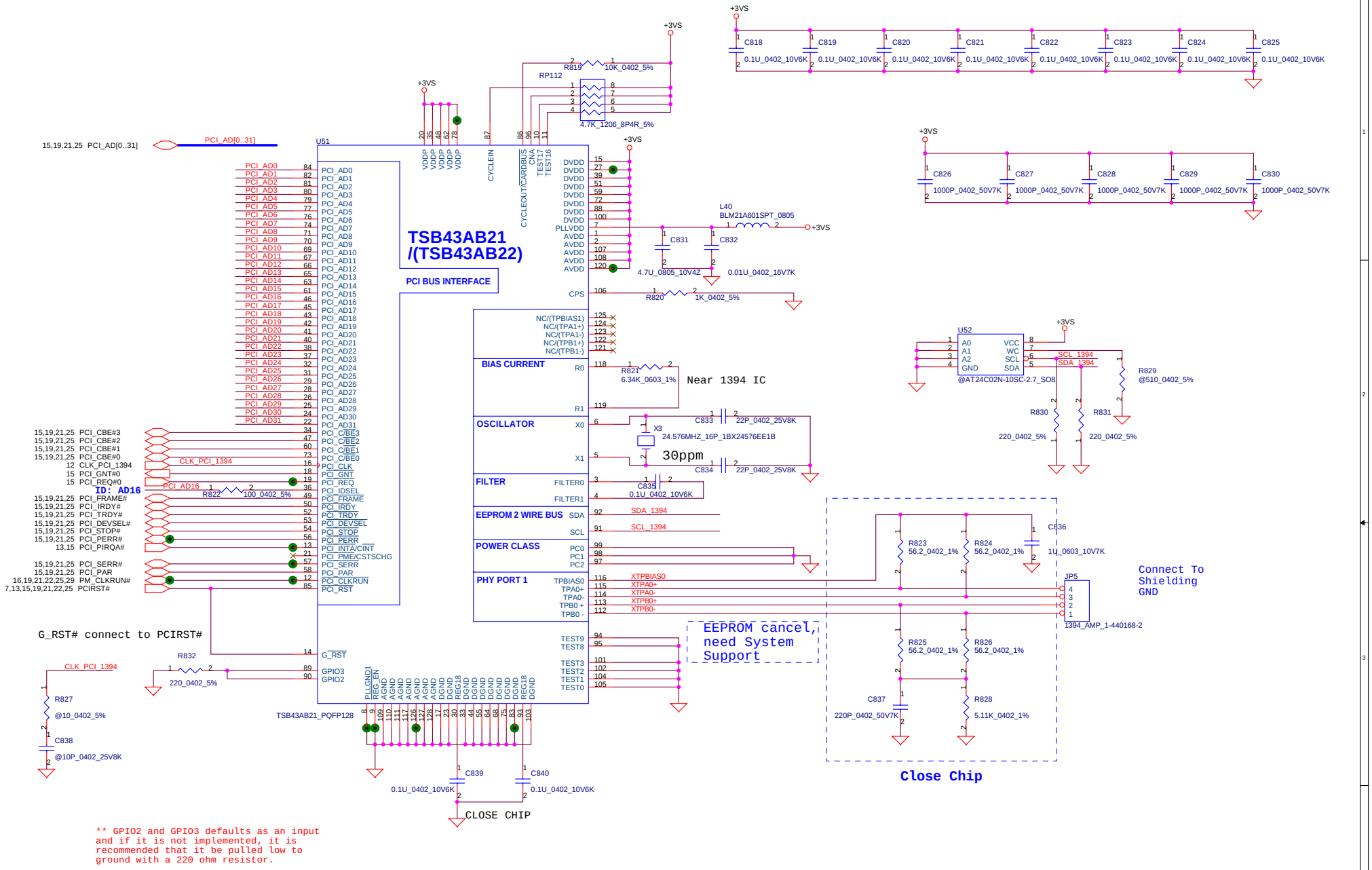

THIS SHEET OF ENGINEERING DRAWING IS THE PROPRIETARY PROPERTY OF COMPAL ELECTRONICS, INC. AND CONTAINS CONFIDENTIAL AND TRADE SECRET INFORMATION. THIS SHEET MAY NOT BE TRANSFERED FROM THE CUSTODY OF THE COMPETENT DIVISION OF R&D DEPARTMENT EXCEPT AS AUTHORIZED BY COMPAL ELECTRONICS, INC. NEITHER THIS SHEET NOR THE INFORMATION IT CONTAINS MAY BE USED BY OR DISCLOSED TO ANY THIRD PARTY WITHOUT PRIOR WRITTEN CONSENT OF COMPAL ELECTRONICS, INC.

Compal Electronics, Inc.	
Title	SCHEMATIC, M/B LA-1991
Size	Document Number 401266
Rev	1A
Date:	星期五, 九月 05, 2003
Sheet	20 of 45

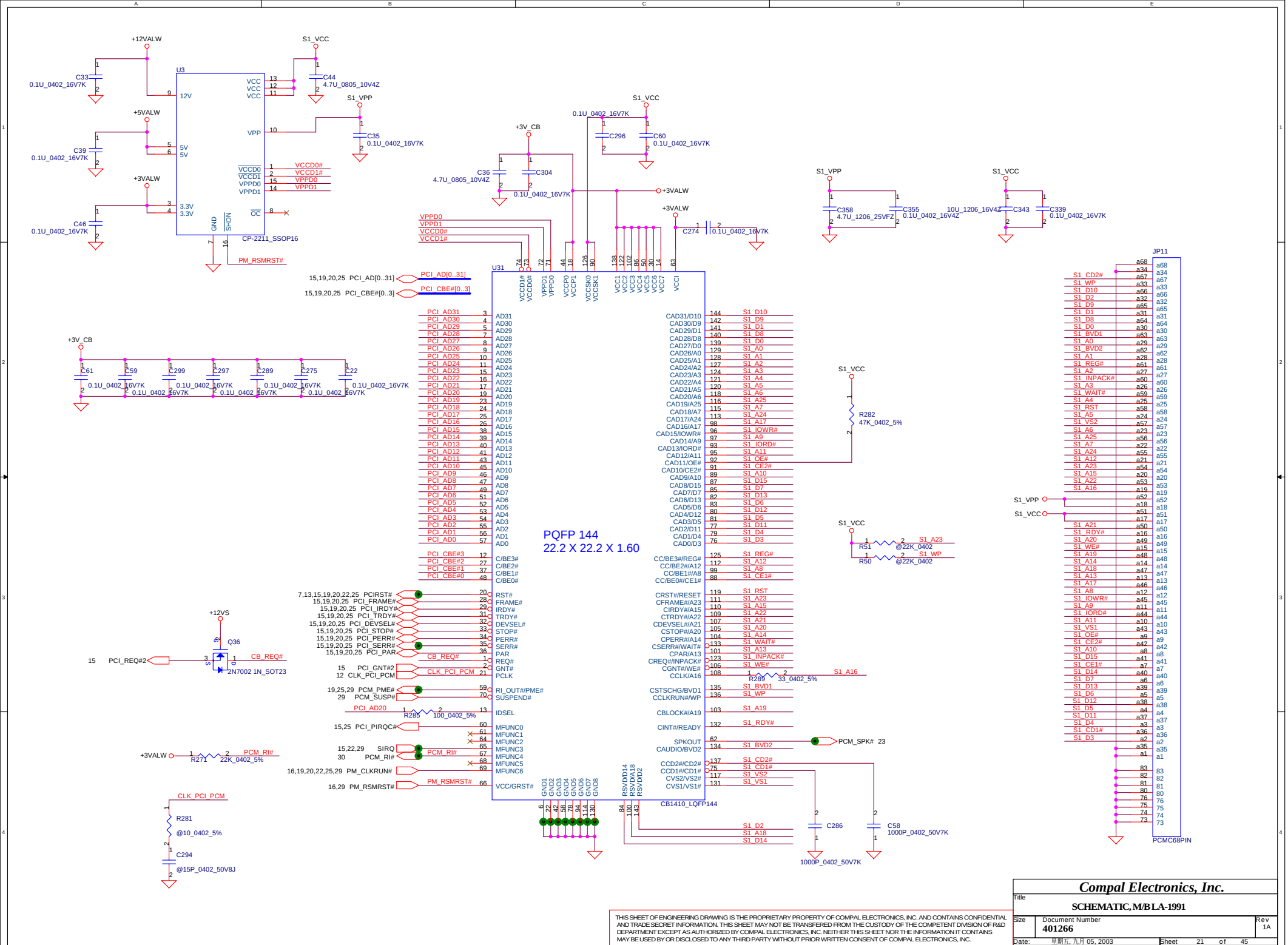

THIS SHEET OF ENGINEERING DRAWING IS THE PROPRIETARY PROPERTY OF COMPAL ELECTRONICS, INC. AND CONTAINS CONFIDENTIAL AND TRADE SECRET INFORMATION. THIS SHEET MAY NOT BE TRANSFERED FROM THE CUSTODY OF THE COMPETENT DIVISION OF R&D DEPARTMENT EXCEPT AS AUTHORIZED BY COMPAL ELECTRONICS, INC. NEITHER THIS SHEET NOR THE INFORMATION IT CONTAINS MAY BE USED BY OR DISCLOSED TO ANY THIRD PARTY WITHOUT PRIOR WRITTEN CONSENT OF COMPAL ELECTRONICS, INC.

Compal Electronics, Inc.

Title: SCHEMATIC, M/B LA-1991

Size: | Document Number: 401266 | Rev: 1A

Date: 星期五, 九月 05, 2003 | Sheet 21 of 45

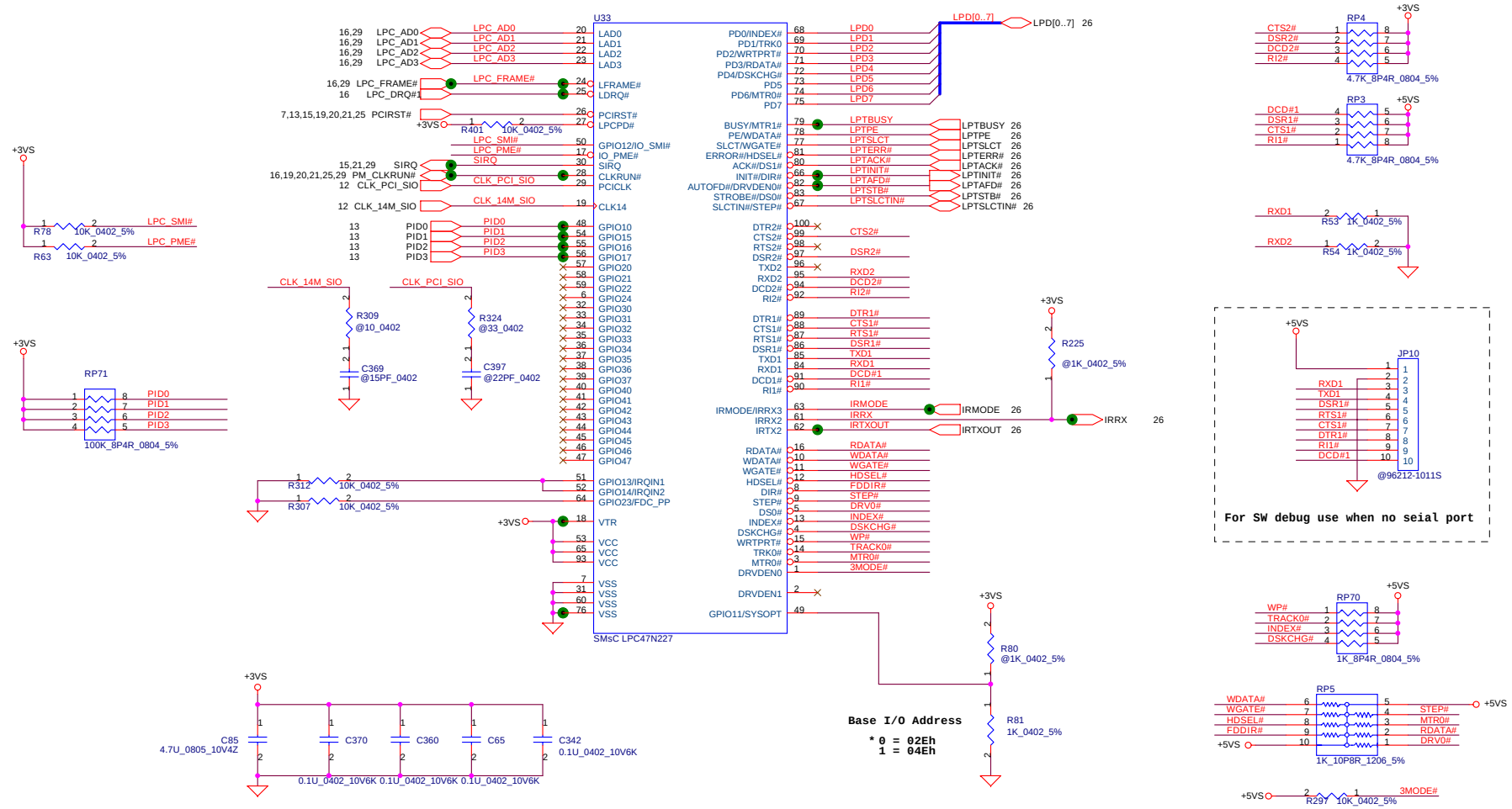

THIS SHEET OF ENGINEERING DRAWING IS THE PROPRIETARY PROPERTY OF COMPAL ELECTRONICS, INC. AND CONTAINS CONFIDENTIAL AND TRADE SECRET INFORMATION. THIS SHEET MAY NOT BE TRANSFERED FROM THE CUSTODY OF THE COMPETENT DIVISION OF R&D DEPARTMENT EXCEPT AS AUTHORIZED BY COMPAL ELECTRONICS, INC. NEITHER THIS SHEET NOR THE INFORMATION IT CONTAINS MAY BE USED BY OR DISCLOSED TO ANY THIRD PARTY WITHOUT PRIOR WRITTEN CONSENT OF COMPAL ELECTRONICS, INC.

Compal Electronics, Inc.

Title: SCHEMATIC, M/B LA-1991

Size: Custom | Document Number: 401266 | Rev: 1A

Date: 星期五, 九月 05, 2003 | Sheet 22 of 45

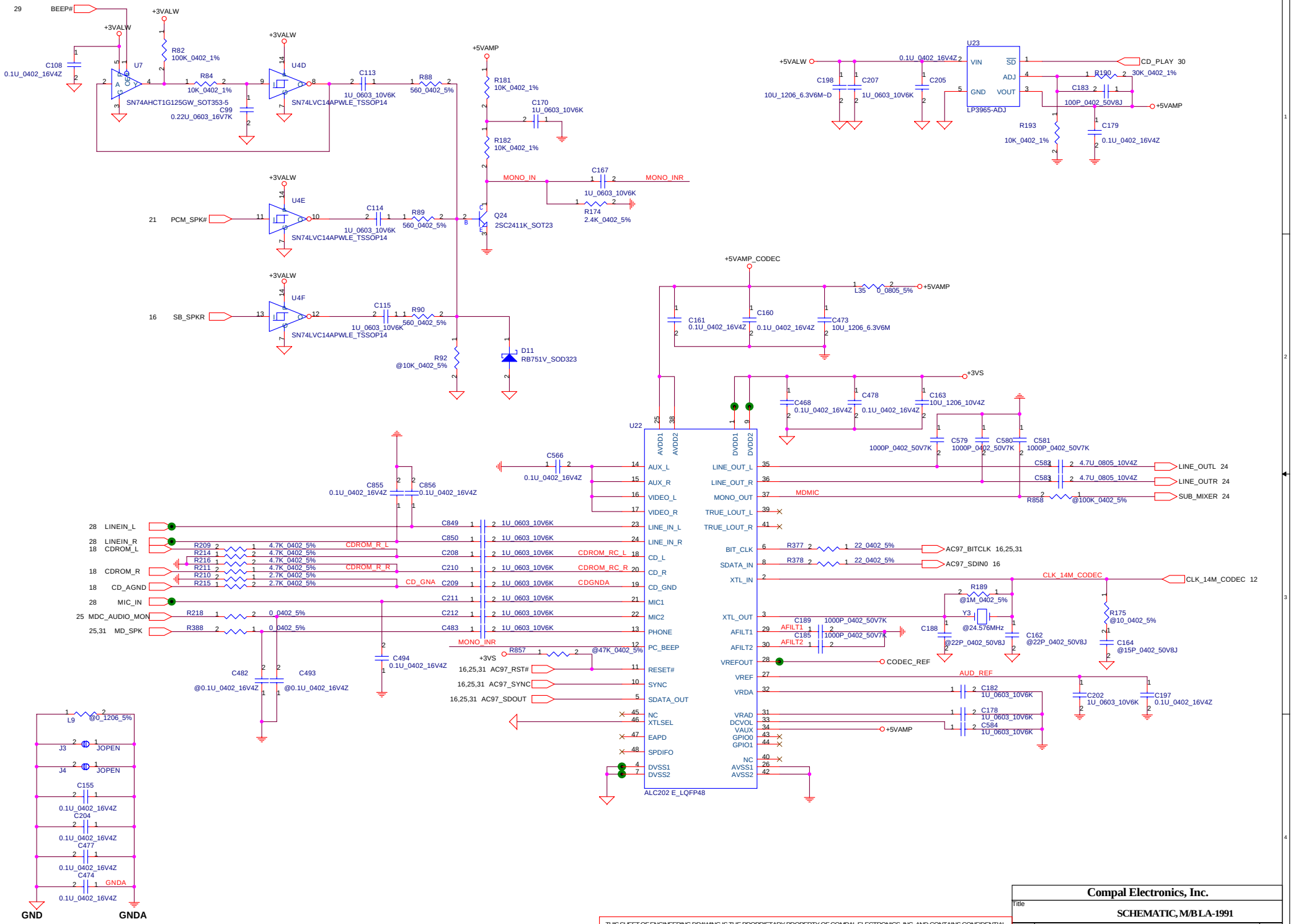

THIS SHEET OF ENGINEERING DRAWING IS THE PROPRIETARY PROPERTY OF COMPAL ELECTRONICS, INC. AND CONTAINS CONFIDENTIAL AND TRADE SECRET INFORMATION. THIS SHEET MAY NOT BE TRANSFERED FROM THE CUSTODY OF THE COMPETENT DIVISION OF R&D DEPARTMENT EXCEPT AS AUTHORIZED BY COMPAL ELECTRONICS, INC. NEITHER THIS SHEET NOR THE INFORMATION IT CONTAINS MAY BE USED BY OR DISCLOSED TO ANY THIRD PARTY WITHOUT PRIOR WRITTEN CONSENT OF COMPAL ELECTRONICS, INC.

Compal Electronics, Inc.

Title: **SCHEMATIC, M/B LA-1991**

Size: Custom | Document Number: **401266** | Rev: 1A

Date: 星期五, 九月 05, 2003 | Sheet 23 of 45

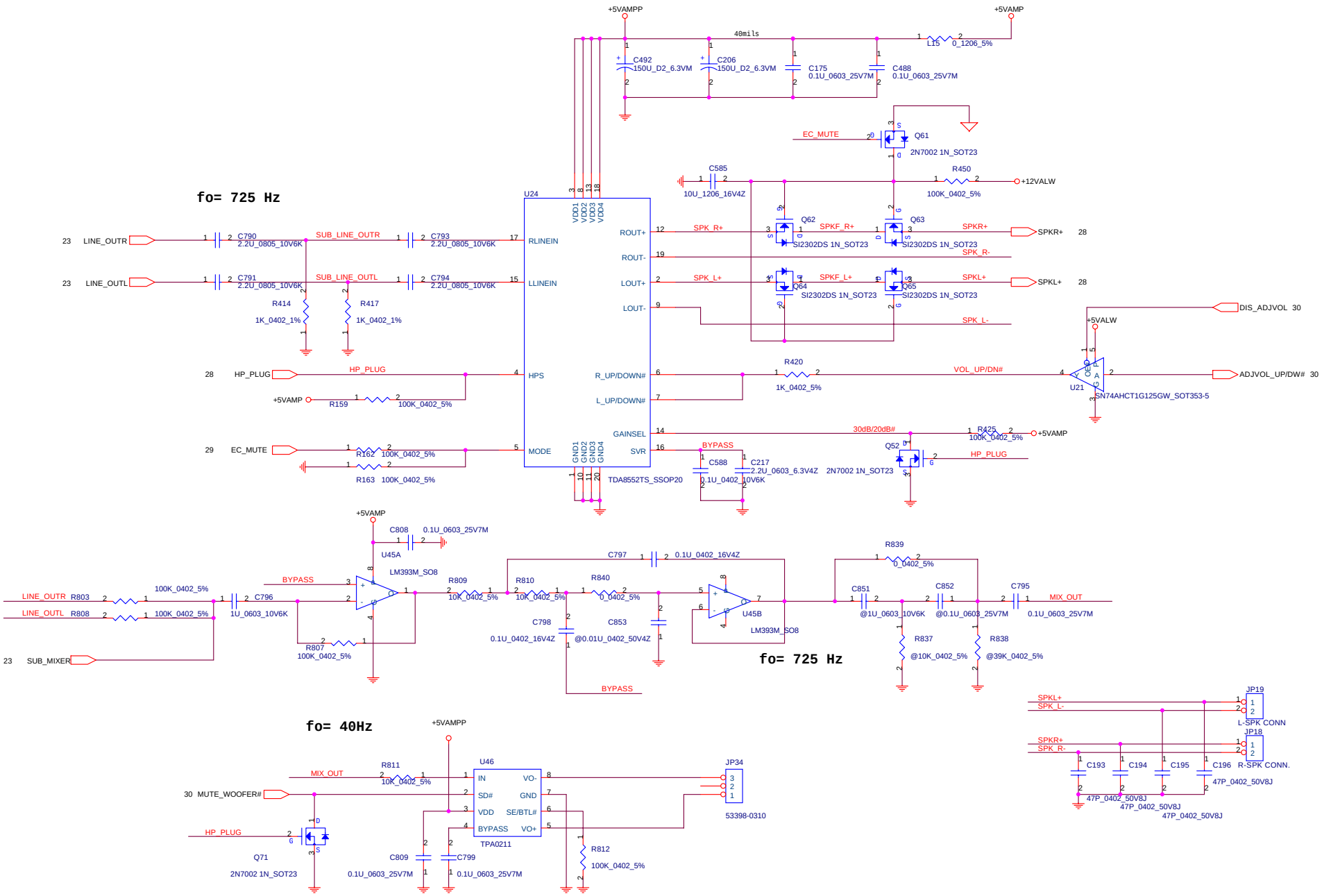

THIS SHEET OF ENGINEERING DRAWING IS THE PROPRIETARY PROPERTY OF COMPAL ELECTRONICS, INC. AND CONTAINS CONFIDENTIAL AND TRADE SECRET INFORMATION. THIS SHEET MAY NOT BE TRANSFERED FROM THE CUSTODY OF THE COMPETENT DIVISION OF R&D DEPARTMENT EXCEPT AS AUTHORIZED BY COMPAL ELECTRONICS, INC. NEITHER THIS SHEET NOR THE INFORMATION IT CONTAINS MAY BE USED BY OR DISCLOSED TO ANY THIRD PARTY WITHOUT PRIOR WRITTEN CONSENT OF COMPAL ELECTRONICS, INC.

Compal Electronics, Inc.

Title: **SCHEMATIC, M/B LA-1991**

Size: Custom | Document Number: **401266** | Rev: 1A

Date: 星期五, 九月 05, 2003 | Sheet 24 of 45

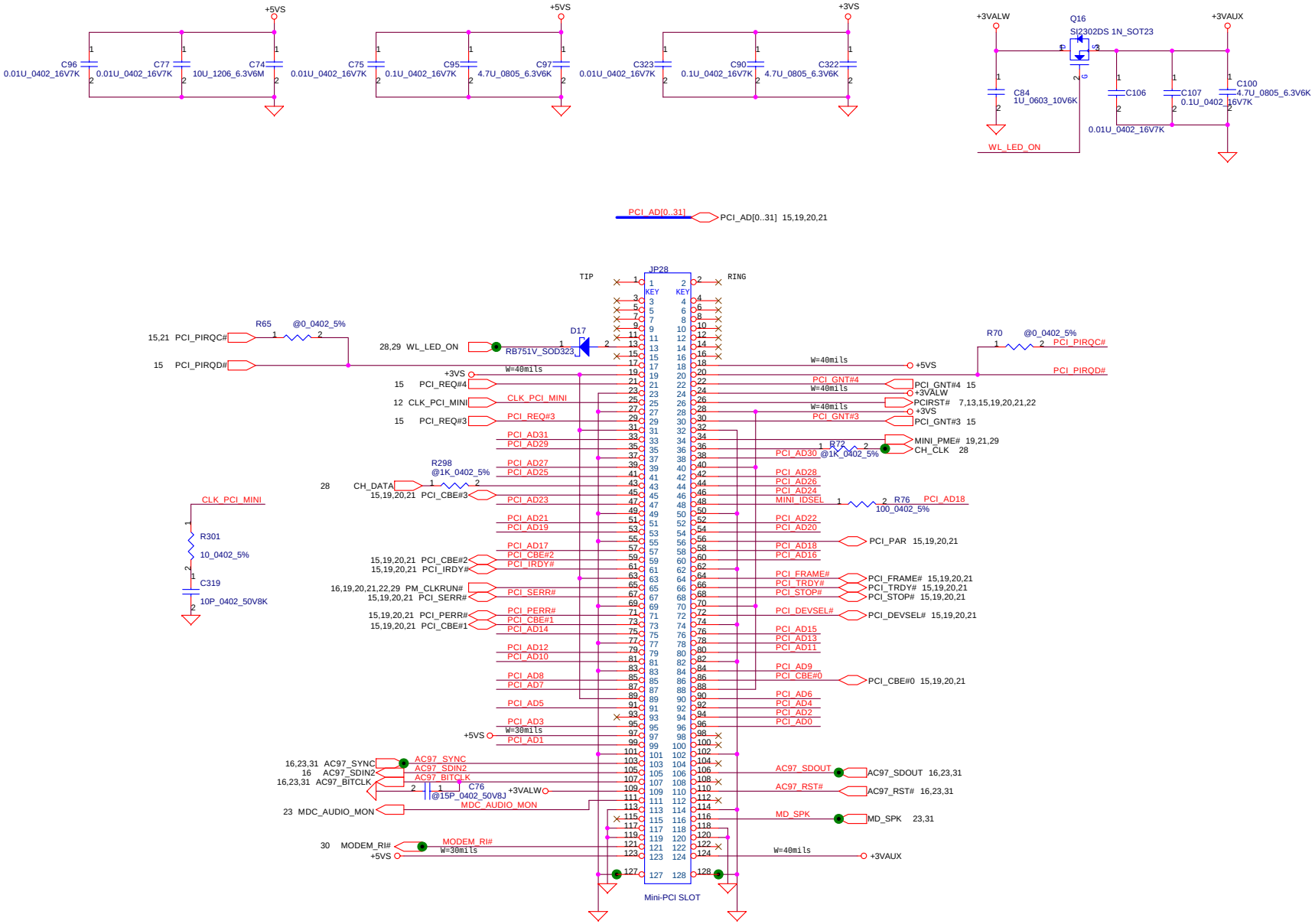

THIS SHEET OF ENGINEERING DRAWING IS THE PROPRIETARY PROPERTY OF COMPAL ELECTRONICS, INC. AND CONTAINS CONFIDENTIAL AND TRADE SECRET INFORMATION. THIS SHEET MAY NOT BE TRANSFERED FROM THE CUSTODY OF THE COMPETENT DIVISION OF R&D DEPARTMENT EXCEPT AS AUTHORIZED BY COMPAL ELECTRONICS, INC. NEITHER THIS SHEET NOR THE INFORMATION IT CONTAINS MAY BE USED BY OR DISCLOSED TO ANY THIRD PARTY WITHOUT PRIOR WRITTEN CONSENT OF COMPAL ELECTRONICS, INC.

Compal Electronics, Inc.

Title: **SCHEMATIC, M/B LA-1991**

Size | Document Number: **401266** | Rev: 1A

Date: 星期五, 九月 05, 2003 | Sheet 25 of 45

Parallel Port

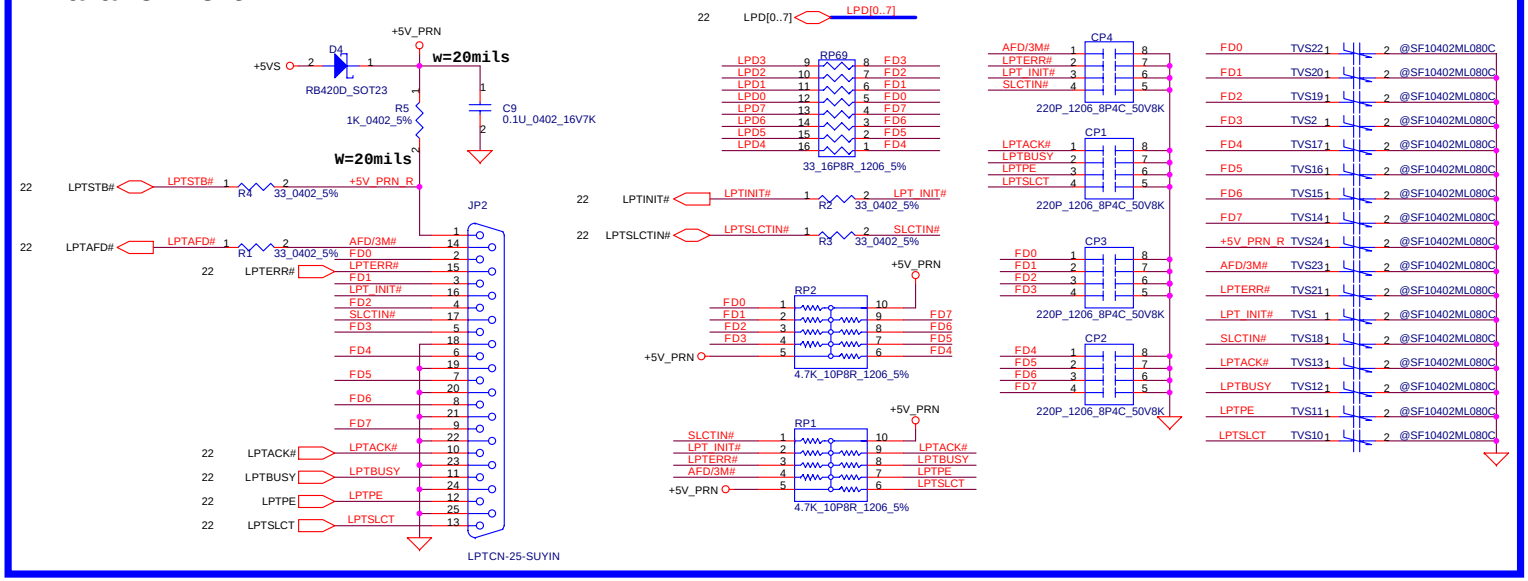

FIR Module

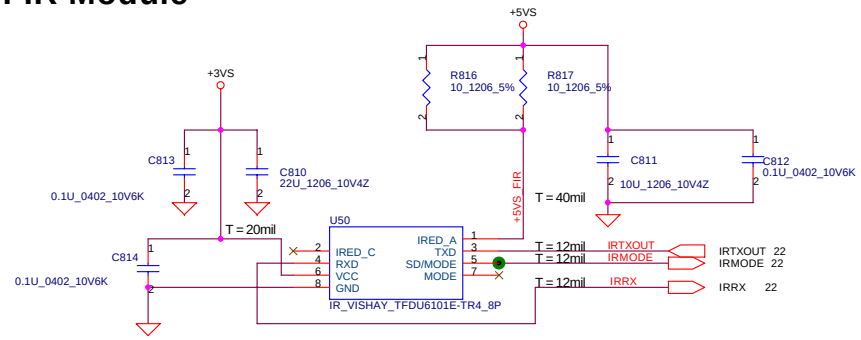

THIS SHEET OF ENGINEERING DRAWING IS THE PROPRIETARY PROPERTY OF COMPAL ELECTRONICS, INC. AND CONTAINS CONFIDENTIAL AND TRADE SECRET INFORMATION. THIS SHEET MAY NOT BE TRANSFERED FROM THE CUSTODY OF THE COMPETENT DIVISION OF R&D DEPARTMENT EXCEPT AS AUTHORIZED BY COMPAL ELECTRONICS, INC. NEITHER THIS SHEET NOR THE INFORMATION IT CONTAINS MAY BE USED BY OR DISCLOSED TO ANY THIRD PARTY WITHOUT PRIOR WRITTEN CONSENT OF COMPAL ELECTRONICS, INC.

Compal Electronics, Inc.

Title: SCHEMATIC, M/B LA-1991

Size | Document Number: 401266 | Rev: 1A

Date: 星期五, 九月 05, 2003 | Sheet 26 of 45

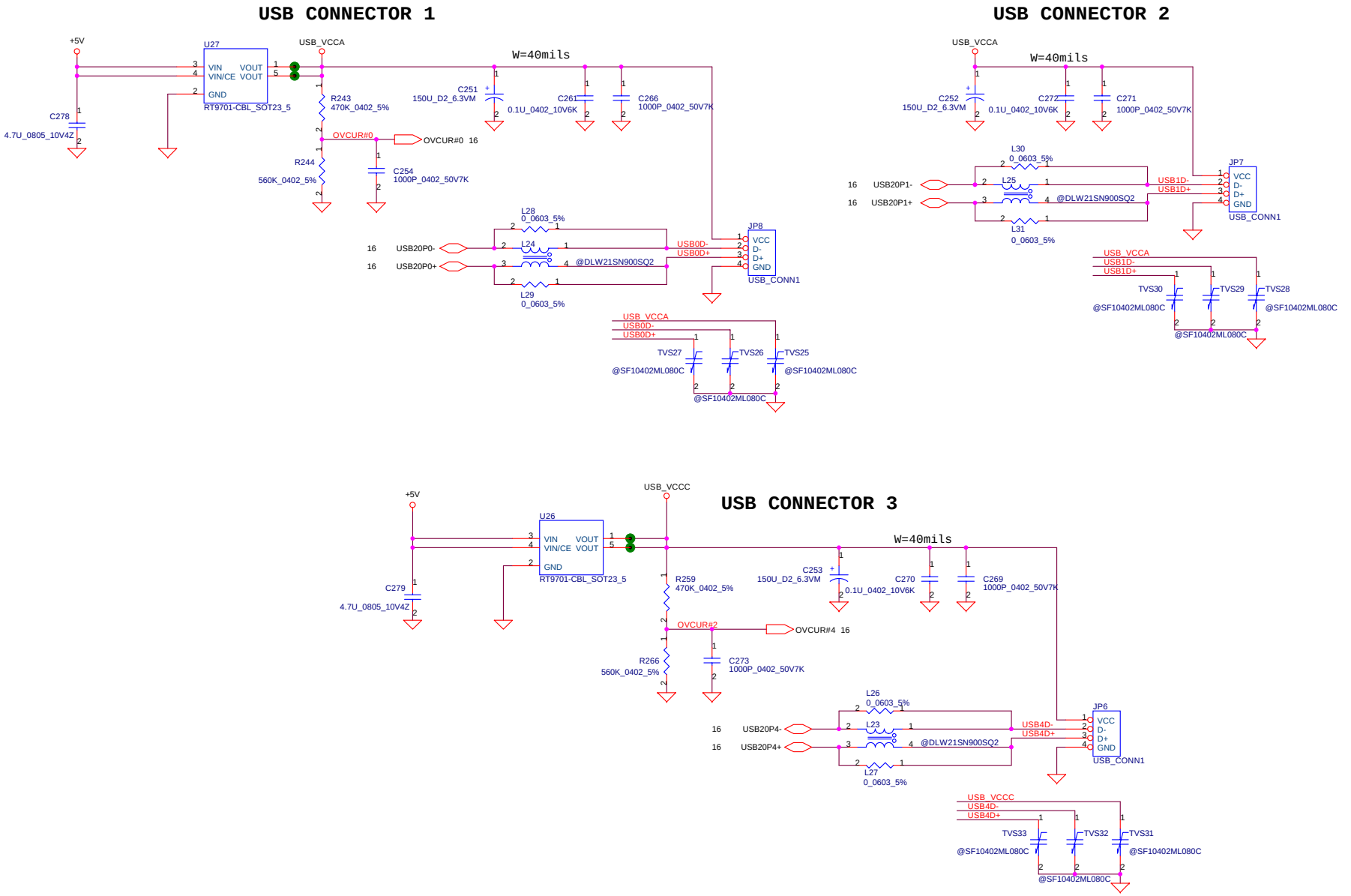

THIS SHEET OF ENGINEERING DRAWING IS THE PROPRIETARY PROPERTY OF COMPAL ELECTRONICS, INC. AND CONTAINS CONFIDENTIAL AND TRADE SECRET INFORMATION. THIS SHEET MAY NOT BE TRANSFERED FROM THE CUSTODY OF THE COMPETENT DIVISION OF R&D DEPARTMENT EXCEPT AS AUTHORIZED BY COMPAL ELECTRONICS, INC. NEITHER THIS SHEET NOR THE INFORMATION IT CONTAINS MAY BE USED BY OR DISCLOSED TO ANY THIRD PARTY WITHOUT PRIOR WRITTEN CONSENT OF COMPAL ELECTRONICS, INC.

Compal Electronics, Inc.

Title: SCHEMATIC, M/B LA-1991

Size: Custom | Document Number: 401266 | Rev: 1A

Date: 星期五, 九月 05, 2003 | Sheet 27 of 45

T/P & LED CONN.

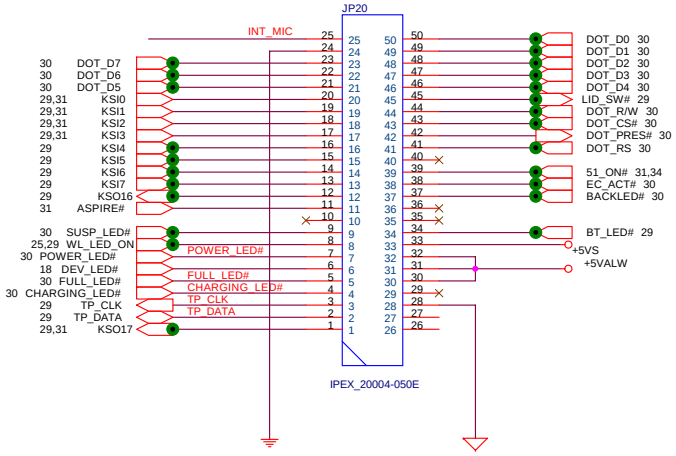

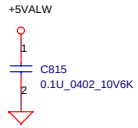

INT_KBD CONN.

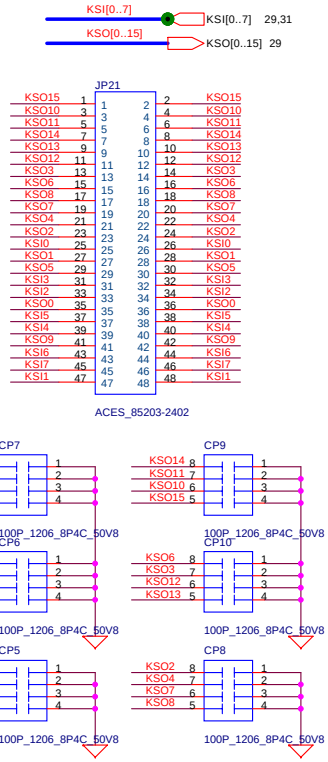

CardReader CONN.

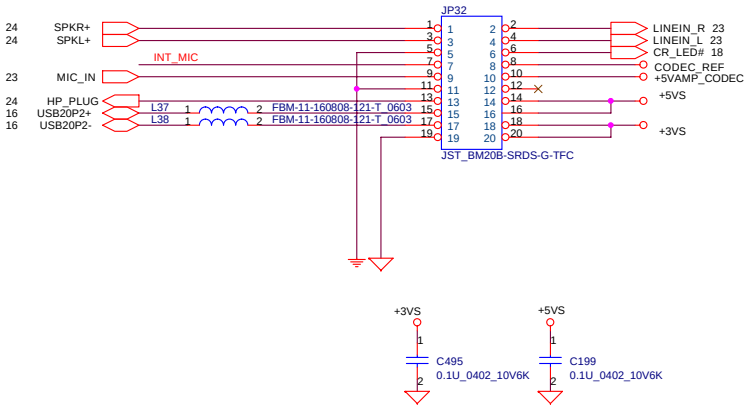

BT_CONN

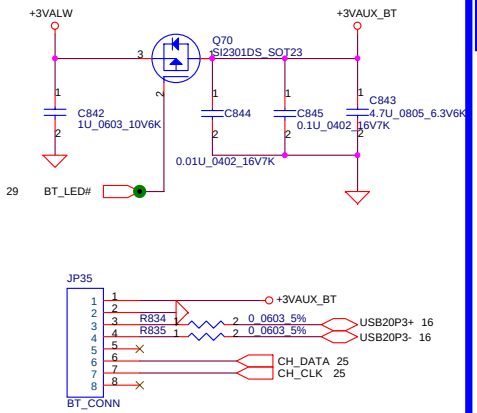

THIS SHEET OF ENGINEERING DRAWING IS THE PROPRIETARY PROPERTY OF COMPAL ELECTRONICS, INC. AND CONTAINS CONFIDENTIAL AND TRADE SECRET INFORMATION. THIS SHEET MAY NOT BE TRANSFERED FROM THE CUSTODY OF THE COMPETENT DIVISION OF R&D DEPARTMENT EXCEPT AS AUTHORIZED BY COMPAL ELECTRONICS, INC. NEITHER THIS SHEET NOR THE INFORMATION IT CONTAINS MAY BE USED BY OR DISCLOSED TO ANY THIRD PARTY WITHOUT PRIOR WRITTEN CONSENT OF COMPAL ELECTRONICS, INC.

Compal Electronics, Inc.			
Title	SCHEMATIC, M/B LA-1991		
Size	Document Number 401266		Rev 1A
Date: 星期五, 九月 05, 2003	Sheet 28 of 45		

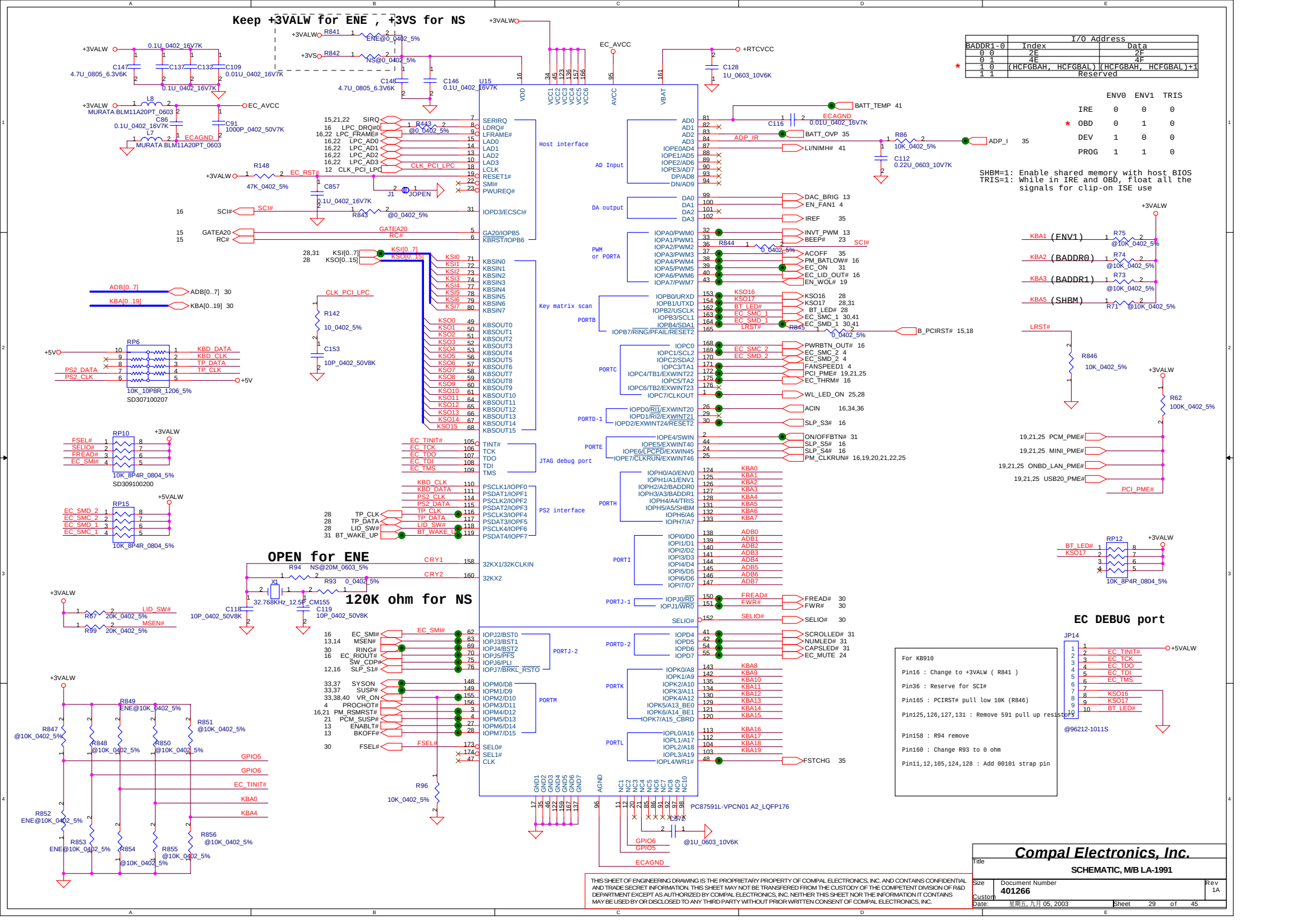
Keep +3VALW for ENE , +3VS for NS
OPEN for ENE
120K ohm for NS
EC DEBUG port
U15
PC87591L-VPCN01 A2_LQFP176
Host interface
AD Input
DA output
PWM or PORTA
Key matrix scan
PORTB
PORTC
PORTD-1
PORTE
JTAG debug port
PORTH
PS2 interface
PORTI
PORTJ-1
PORTD-2
PORTJ-2
PORTK
PORTM
PORTL
SHBM=1: Enable shared memory with host BIOS
TRIS=1: While in IRE and OBD, float all the signals for clip-on ISE use
For KB910
Pin16 : Change to +3VALW (R841)
Pin36 : Reserve for SCI#
Pin165 : PCIRST# pull low 10K (R846)
Pin125,126,127,131 : Remove 591 pull up resistors
Pin158 : R94 remove
Pin160 : Change R93 to 0 ohm
Pin11,12,105,124,128 : Add 00101 strap pin
@96212-1011S
Compal Electronics, Inc.
SCHEMATIC, M/B LA-1991
Document Number
401266
Rev 1A
Sheet 29 of 45
Date: 星期五, 九月 05, 2003

INPUT

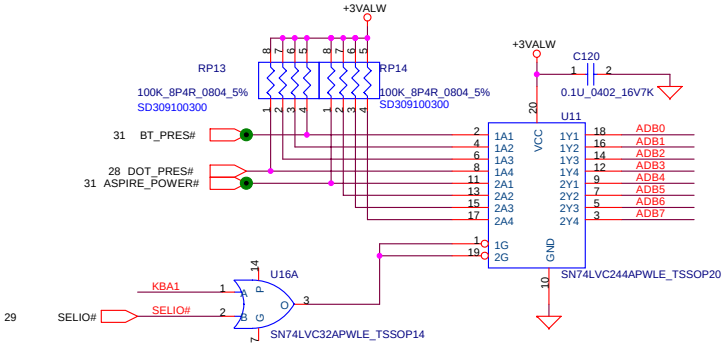

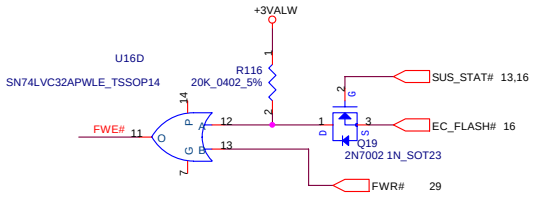

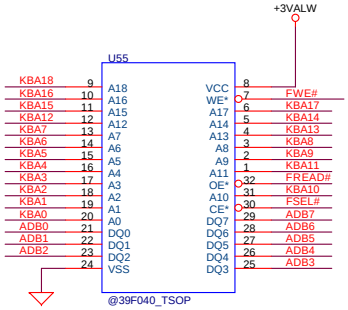

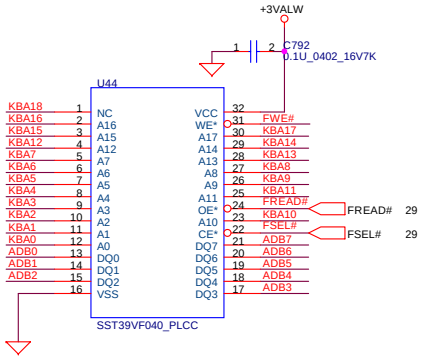

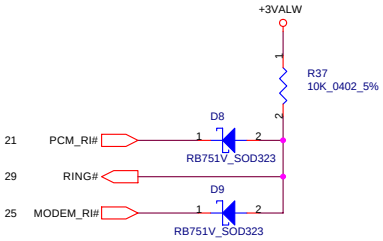

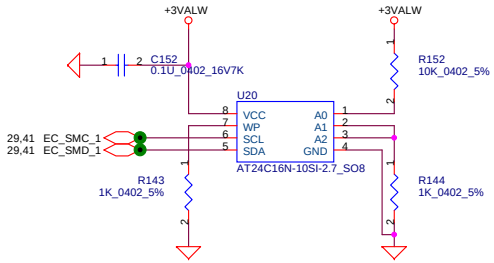

29 KBA[0..19]
29 ADB[0..7]

KBA[0..19]
ADB[0..7]

OUTPUT

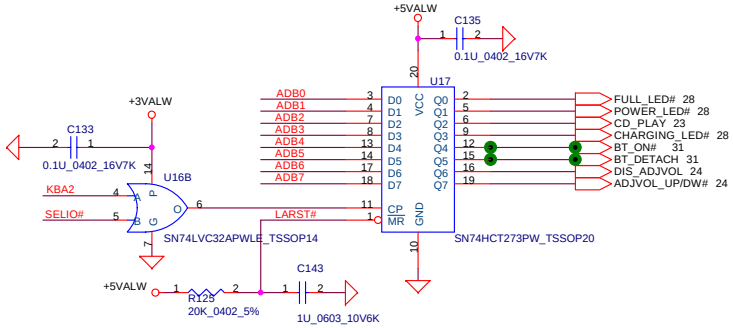

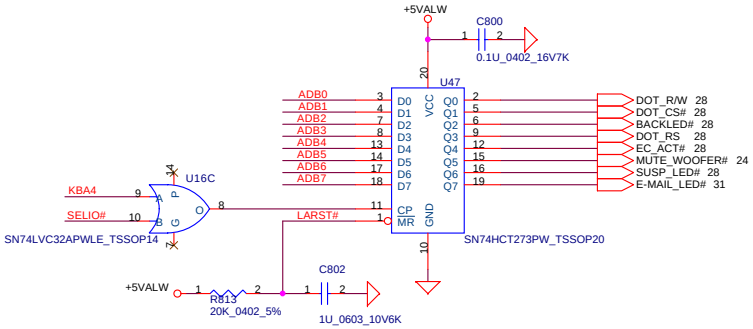

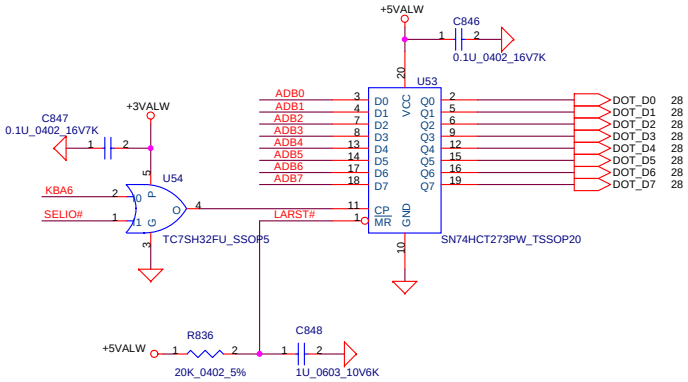

THIS SHEET OF ENGINEERING DRAWING IS THE PROPRIETARY PROPERTY OF COMPAL ELECTRONICS, INC. AND CONTAINS CONFIDENTIAL AND TRADE SECRET INFORMATION. THIS SHEET MAY NOT BE TRANSFERED FROM THE CUSTODY OF THE COMPETENT DIVISION OF R&D DEPARTMENT EXCEPT AS AUTHORIZED BY COMPAL ELECTRONICS, INC. NEITHER THIS SHEET NOR THE INFORMATION IT CONTAINS MAY BE USED BY OR DISCLOSED TO ANY THIRD PARTY WITHOUT PRIOR WRITTEN CONSENT OF COMPAL ELECTRONICS, INC.

Compal Electronics, Inc.

Title: SCHEMATIC, M/B LA-1991

Size	Document Number	Rev
	401266	1A

Date: 星期五, 九月 05, 2003 | Sheet 30 of 45

MDC Conn.

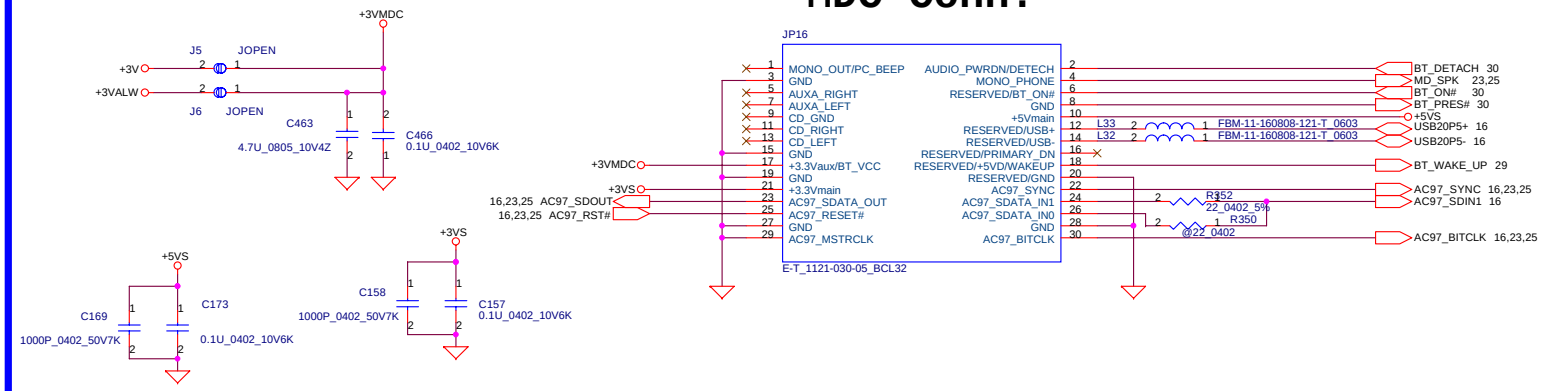

ON/OFF BUTTON

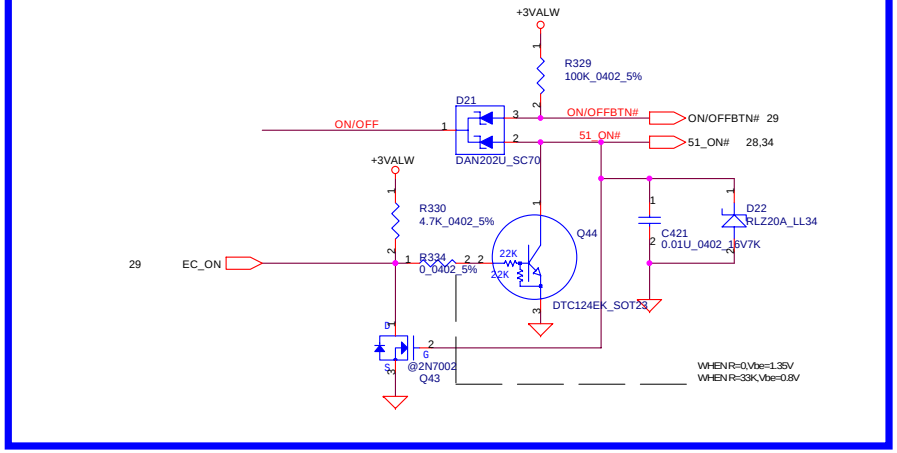

SWITCH CONN

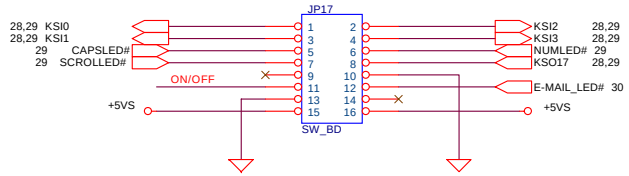

ASPIRE POWER

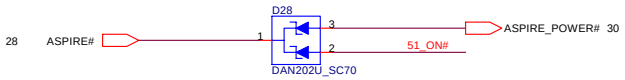

THIS SHEET OF ENGINEERING DRAWING IS THE PROPRIETARY PROPERTY OF COMPAL ELECTRONICS, INC. AND CONTAINS CONFIDENTIAL AND TRADE SECRET INFORMATION. THIS SHEET MAY NOT BE TRANSFERED FROM THE CUSTODY OF THE COMPETENT DIVISION OF R&D DEPARTMENT EXCEPT AS AUTHORIZED BY COMPAL ELECTRONICS, INC. NEITHER THIS SHEET NOR THE INFORMATION IT CONTAINS MAY BE USED BY OR DISCLOSED TO ANY THIRD PARTY WITHOUT PRIOR WRITTEN CONSENT OF COMPAL ELECTRONICS, INC.

Compal Electronics, Inc.

Title	SCHEMATIC, M/B LA-1991	
Size	Document Number 401266	Rev 1A
Custom		
Date: 星期五, 九月 05, 2003	Sheet 31 of 45	

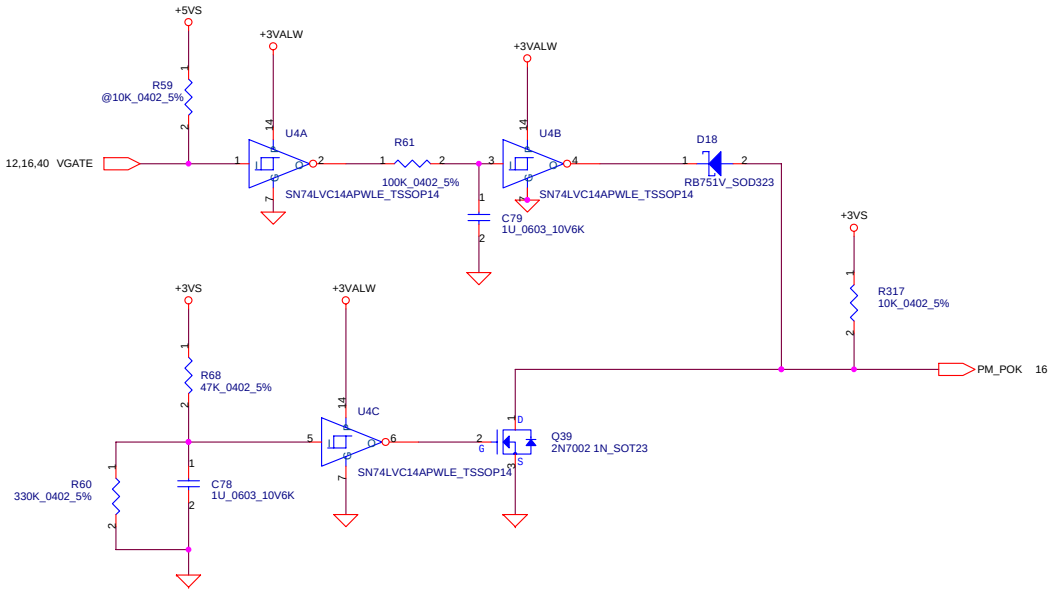

THIS SHEET OF ENGINEERING DRAWING IS THE PROPRIETARY PROPERTY OF COMPAL ELECTRONICS, INC. AND CONTAINS CONFIDENTIAL AND TRADE SECRET INFORMATION. THIS SHEET MAY NOT BE TRANSFERED FROM THE CUSTODY OF THE COMPETENT DIVISION OF R&D DEPARTMENT EXCEPT AS AUTHORIZED BY COMPAL ELECTRONICS, INC. NEITHER THIS SHEET NOR THE INFORMATION IT CONTAINS MAY BE USED BY OR DISCLOSED TO ANY THIRD PARTY WITHOUT PRIOR WRITTEN CONSENT OF COMPAL ELECTRONICS, INC.

Compal Electronics, Inc.

Title	SCHEMATIC, M/B LA-1991	
Size	Document Number 401266	Rev 1A
Date: 星期五, 九月 05, 2003	Sheet 32 of 45	

+3VALW to +3V Transfer

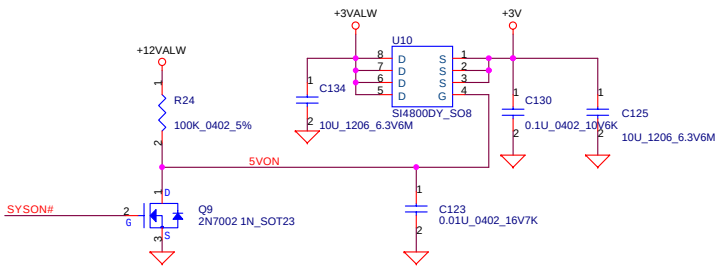

+3VALW to +3VS Transfer

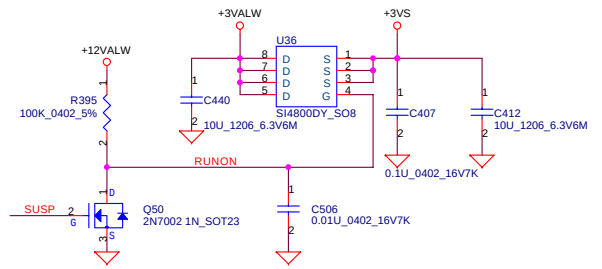

+12VALW TO +12V Transfer

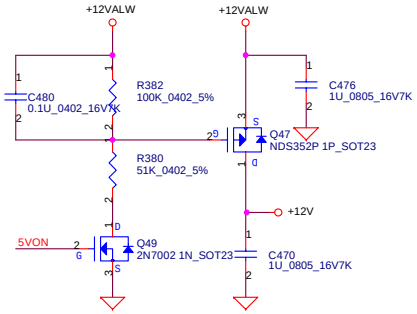

+5VALW to +5V Transfer

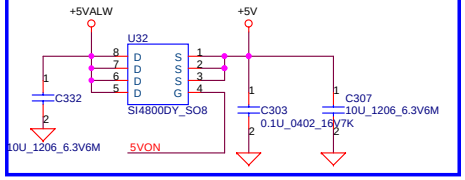

+5VALW to +5VS Transfer

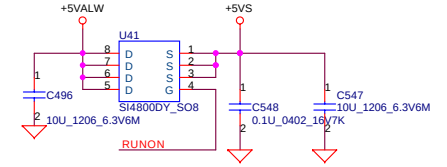

+12VALW TO +12VS Transfer

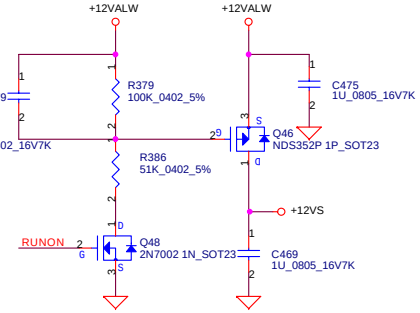

+2.5V to +2.5VS Transfer

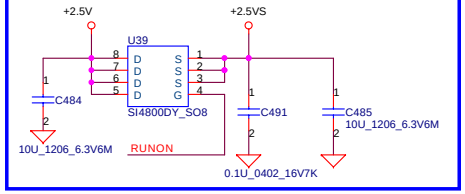

+1.5VALW to +1.5VS Transfer

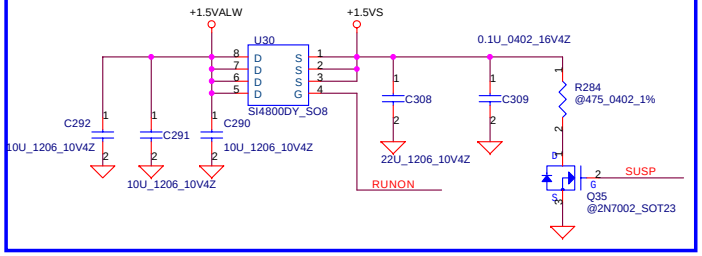

Discharge circuit

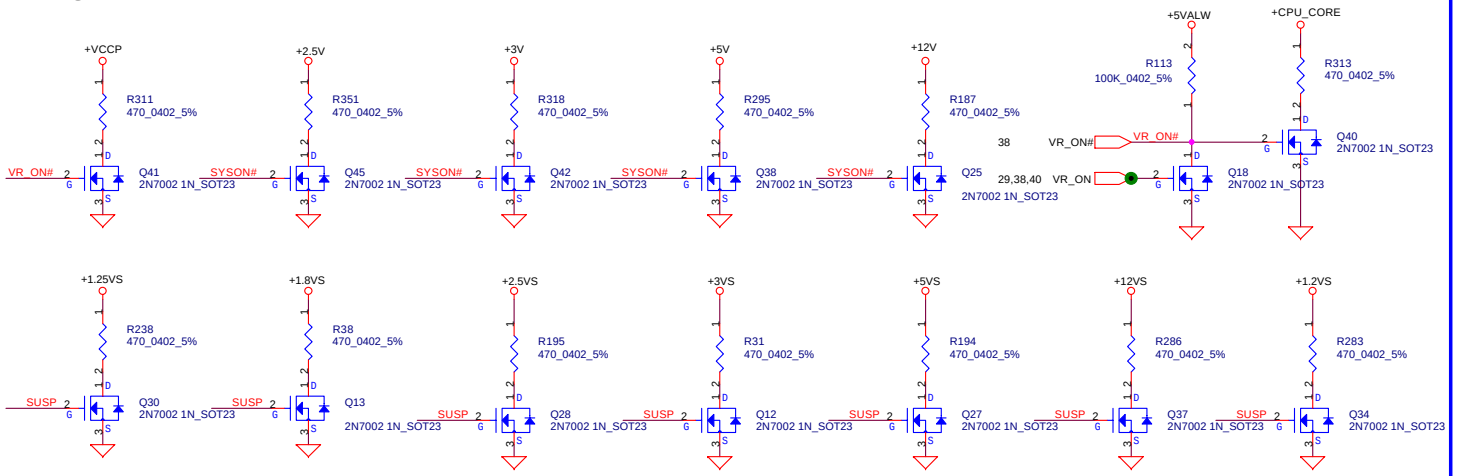

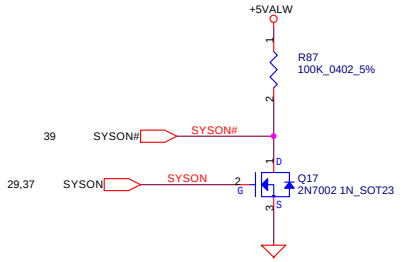

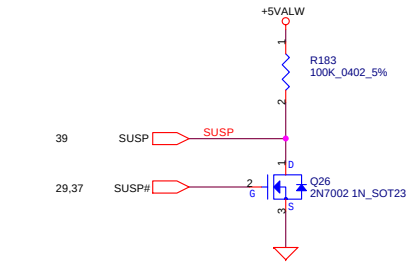

THIS SHEET OF ENGINEERING DRAWING IS THE PROPRIETARY PROPERTY OF COMPAL ELECTRONICS, INC. AND CONTAINS CONFIDENTIAL AND TRADE SECRET INFORMATION. THIS SHEET MAY NOT BE TRANSFERED FROM THE CUSTODY OF THE COMPETENT DIVISION OF R&D DEPARTMENT EXCEPT AS AUTHORIZED BY COMPAL ELECTRONICS, INC. NEITHER THIS SHEET NOR THE INFORMATION IT CONTAINS MAY BE USED BY OR DISCLOSED TO ANY THIRD PARTY WITHOUT PRIOR WRITTEN CONSENT OF COMPAL ELECTRONICS, INC.

Compal Electronics, Inc.	
Title	SCHEMATIC, M/B LA-1991
Size	Document Number 401266 — Rev 1A
Date: 星期五, 九月 05, 2003	Sheet 33 of 45

Detector

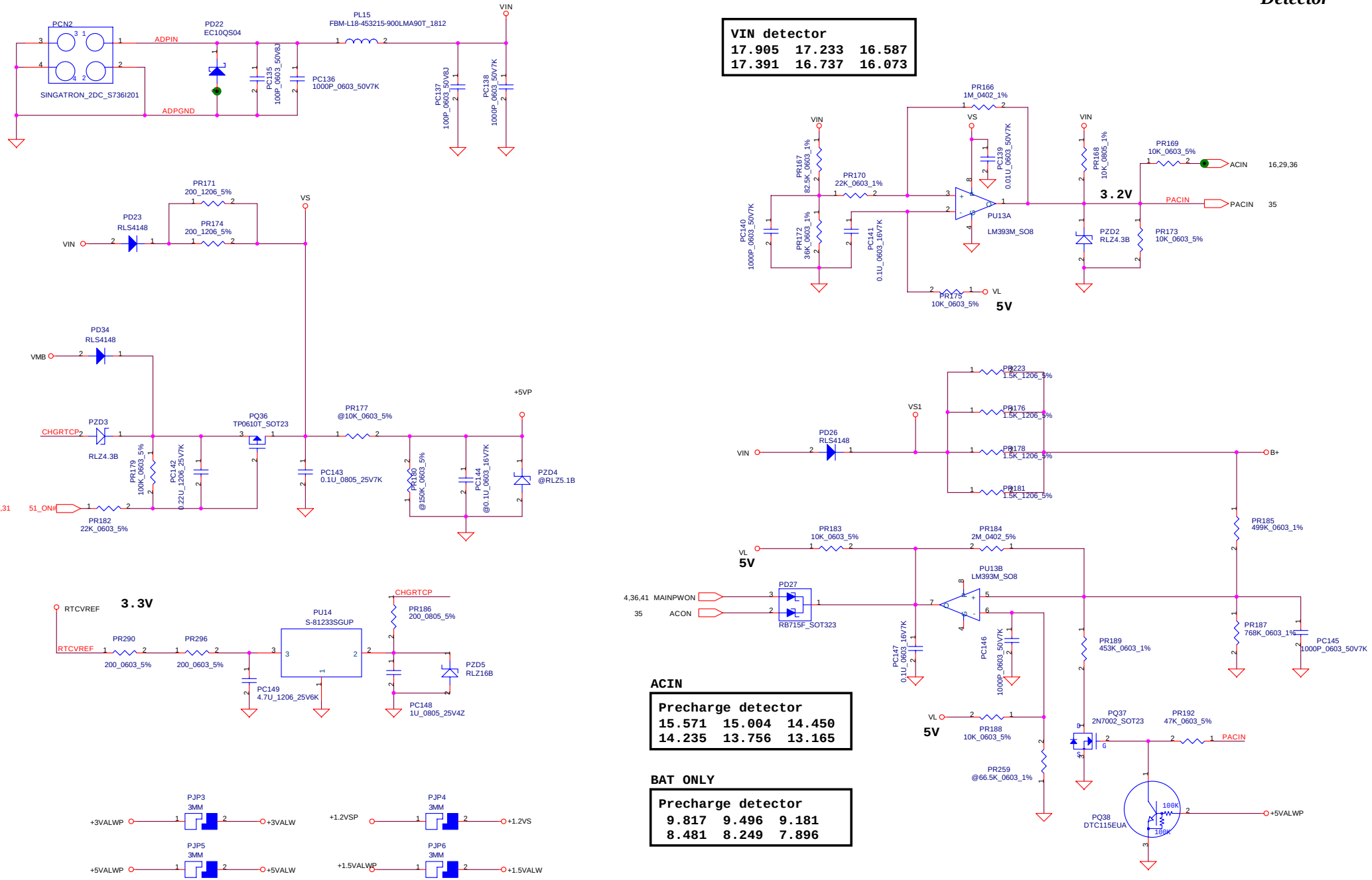

VIN detector

17.905	17.233	16.587
17.391	16.737	16.073

ACIN

Precharge detector

15.571	15.004	14.450
14.235	13.756	13.165

BAT ONLY

Precharge detector

9.817	9.496	9.181
8.481	8.249	7.896

THIS SHEET OF ENGINEERING DRAWING IS THE PROPRIETARY PROPERTY OF COMPAL ELECTRONICS, INC. AND CONTAINS CONFIDENTIAL AND TRADE SECRET INFORMATION. THIS SHEET MAY NOT BE TRANSFERED FROM THE CUSTODY OF THE COMPETENT DIVISION OF R&D DEPARTMENT EXCEPT AS AUTHORIZED BY COMPAL ELECTRONICS, INC. NEITHER THIS SHEET NOR THE INFORMATION IT CONTAINS MAY BE USED BY OR DISCLOSED TO ANY THIRD PARTY WITHOUT PRIOR WRITTEN CONSENT OF COMPAL ELECTRONICS, INC.

Charger

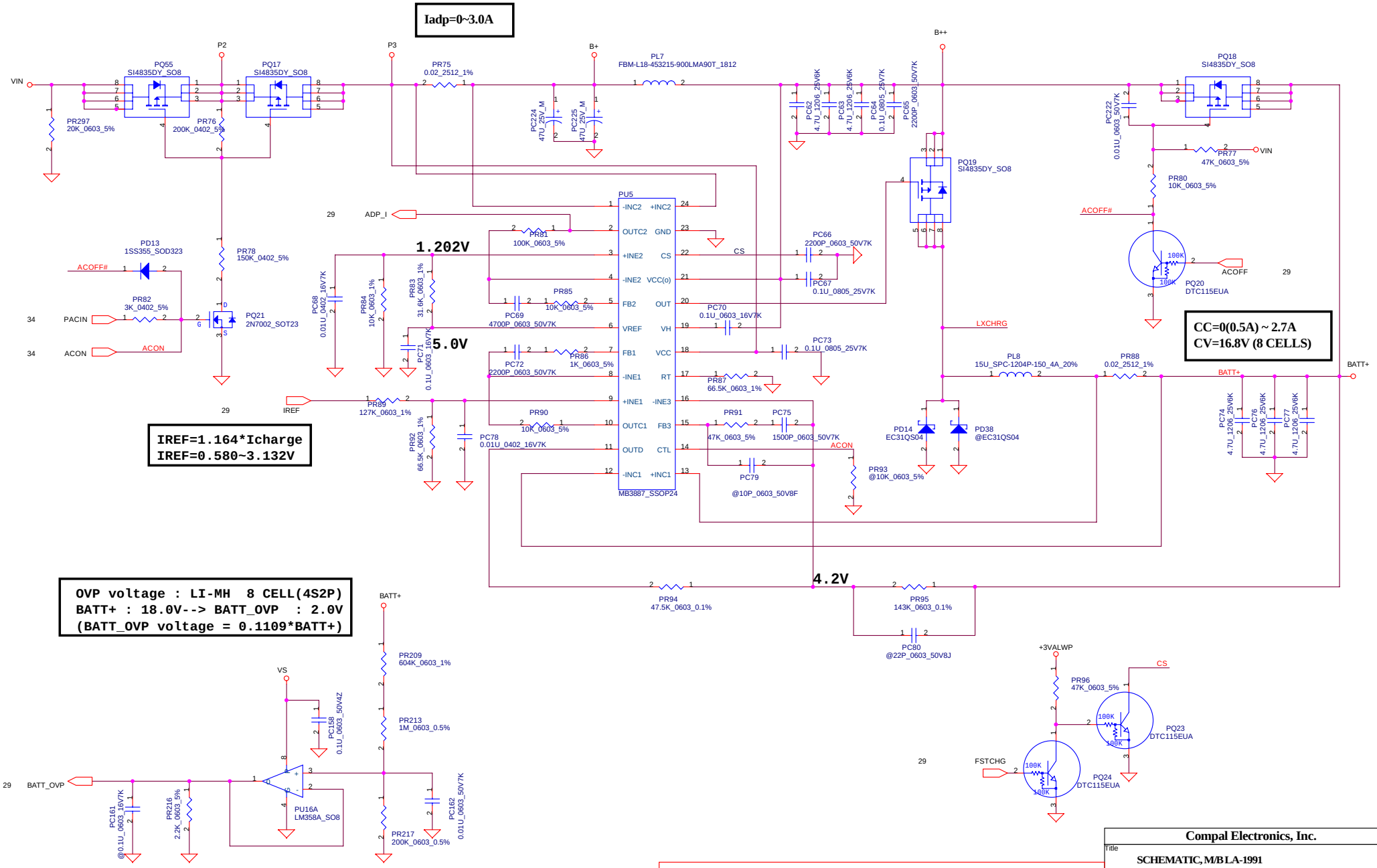

THIS SHEET OF ENGINEERING DRAWING IS THE PROPRIETARY PROPERTY OF COMPAL ELECTRONICS, INC. AND CONTAINS CONFIDENTIAL AND TRADE SECRET INFORMATION. THIS SHEET MAY NOT BE TRANSFERED FROM THE CUSTODY OF THE COMPETENT DIVISION OF R&D DEPARTMENT EXCEPT AS AUTHORIZED BY COMPAL ELECTRONICS, INC. NEITHER THIS SHEET NOR THE INFORMATION IT CONTAINS MAY BE USED BY OR DISCLOSED TO ANY THIRD PARTY WITHOUT PRIOR WRITTEN CONSENT OF COMPAL ELECTRONICS, INC.

Compal Electronics, Inc.	
Title	SCHEMATIC, M/B LA-1991
Size B	Document Number
Rev	
Date: 星期五, 九月 05, 2003	Sheet 35 of 45

+3.3V/+5V/+12V

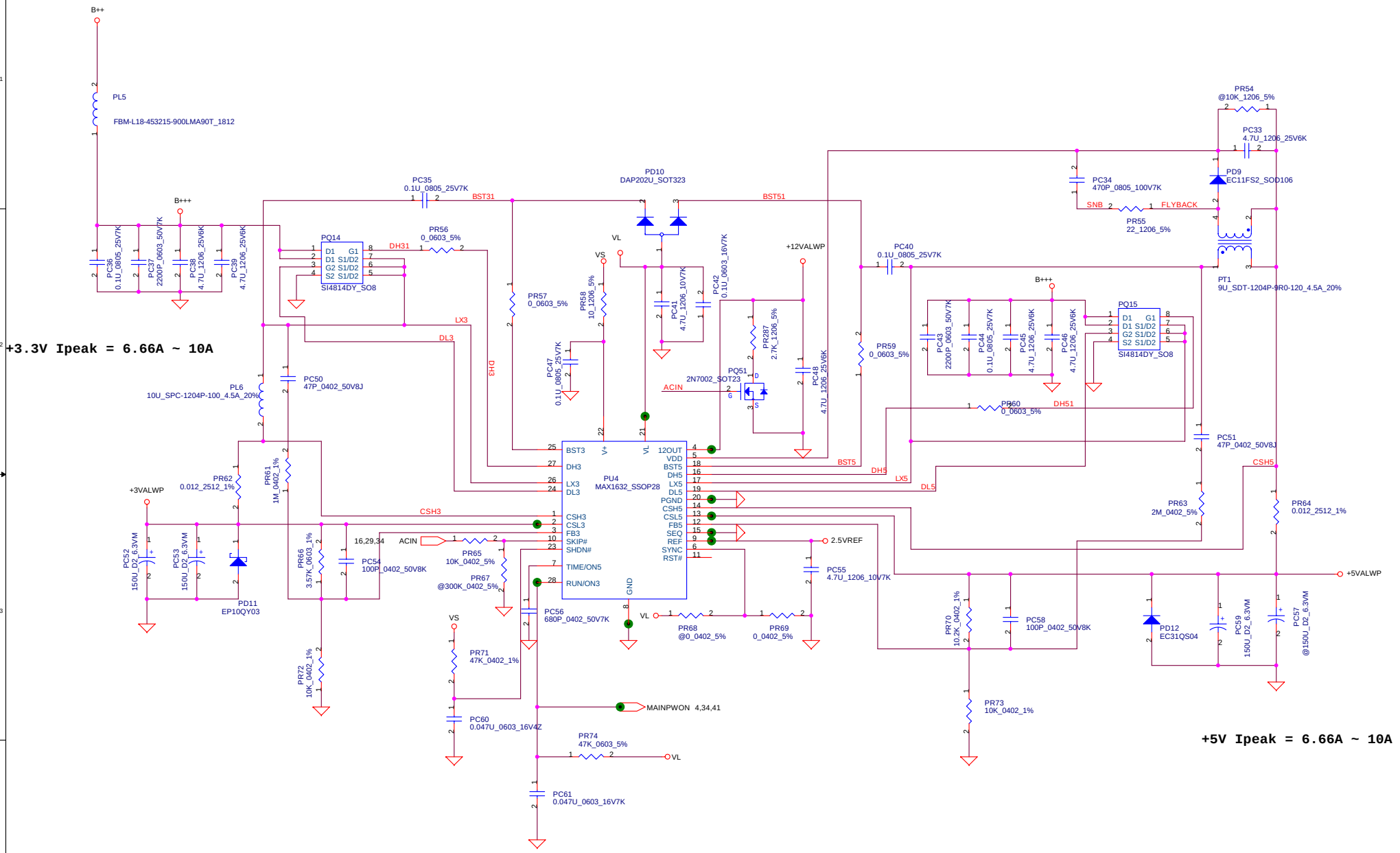

THIS SHEET OF ENGINEERING DRAWING IS THE PROPRIETARY PROPERTY OF COMPAL ELECTRONICS, INC. AND CONTAINS CONFIDENTIAL AND TRADE SECRET INFORMATION. THIS SHEET MAY NOT BE TRANSFERED FROM THE CUSTODY OF THE COMPETENT DIVISION OF R&D DEPARTMENT EXCEPT AS AUTHORIZED BY COMPAL ELECTRONICS, INC. NEITHER THIS SHEET NOR THE INFORMATION IT CONTAINS MAY BE USED BY OR DISCLOSED TO ANY THIRD PARTY WITHOUT PRIOR WRITTEN CONSENT OF COMPAL ELECTRONICS, INC.

Title	SCHEMATIC, M/B LA-1991		
Size B	Document Number		Rev
Date: 星期五, 九月 05, 2003	Sheet 36 of 45		

+2.5VP/+1.8VSP

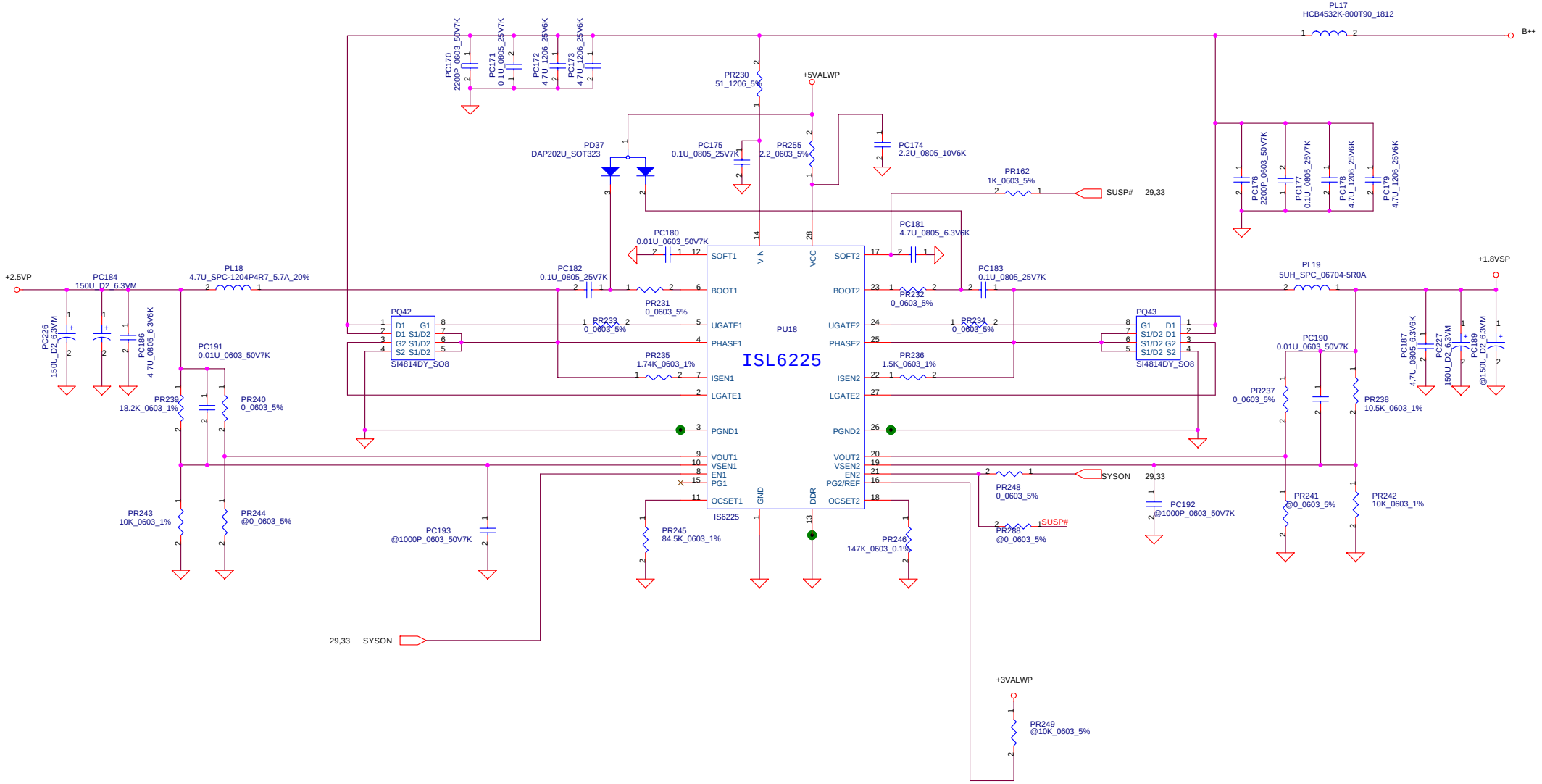

THIS SHEET OF ENGINEERING DRAWING IS THE PROPRIETARY PROPERTY OF COMPAL ELECTRONICS, INC. AND CONTAINS CONFIDENTIAL AND TRADE SECRET INFORMATION. THIS SHEET MAY NOT BE TRANSFERED FROM THE CUSTODY OF THE COMPETENT DIVISION OF R&D DEPARTMENT EXCEPT AS AUTHORIZED BY COMPAL ELECTRONICS, INC. NEITHER THIS SHEET NOR THE INFORMATION IT CONTAINS MAY BE USED BY OR DISCLOSED TO ANY THIRD PARTY WITHOUT PRIOR WRITTEN CONSENT OF COMPAL ELECTRONICS, INC.

Compal Electronics, Inc.	
Title	SCHEMATIC, M/B LA-1991
Size B	Document Number
Rev	
Date: 星期五, 九月 05, 2003	Sheet 37 of 45

+1.2VSP/+1.5VALWP/1.05VSP

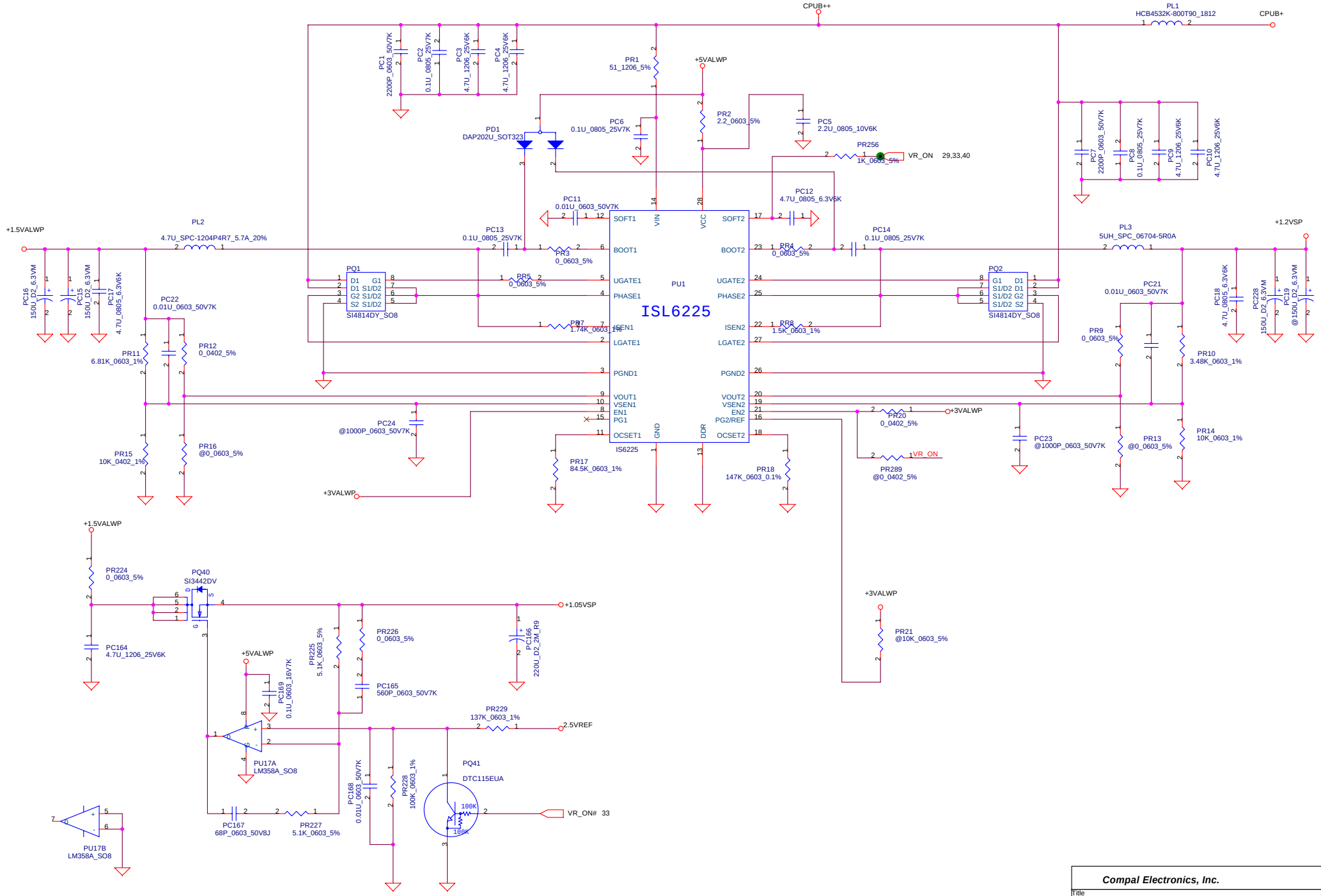

THIS SHEET OF ENGINEERING DRAWING IS THE PROPRIETARY PROPERTY OF COMPAL ELECTRONICS, INC. AND CONTAINS CONFIDENTIAL AND TRADE SECRET INFORMATION. THIS SHEET MAY NOT BE TRANSFERED FROM THE CUSTODY OF THE COMPETENT DIVISION OF R&D DEPARTMENT EXCEPT AS AUTHORIZED BY COMPAL ELECTRONICS, INC. NEITHER THIS SHEET NOR THE INFORMATION IT CONTAINS MAY BE USED BY OR DISCLOSED TO ANY THIRD PARTY WITHOUT PRIOR WRITTEN CONSENT OF COMPAL ELECTRONICS, INC.

Compal Electronics, Inc.	
Title	SCHEMATIC, M/B LA-1991
Size B	Document Number / Rev
Date: 星期五, 九月 05, 2003	Sheet 38 of 45

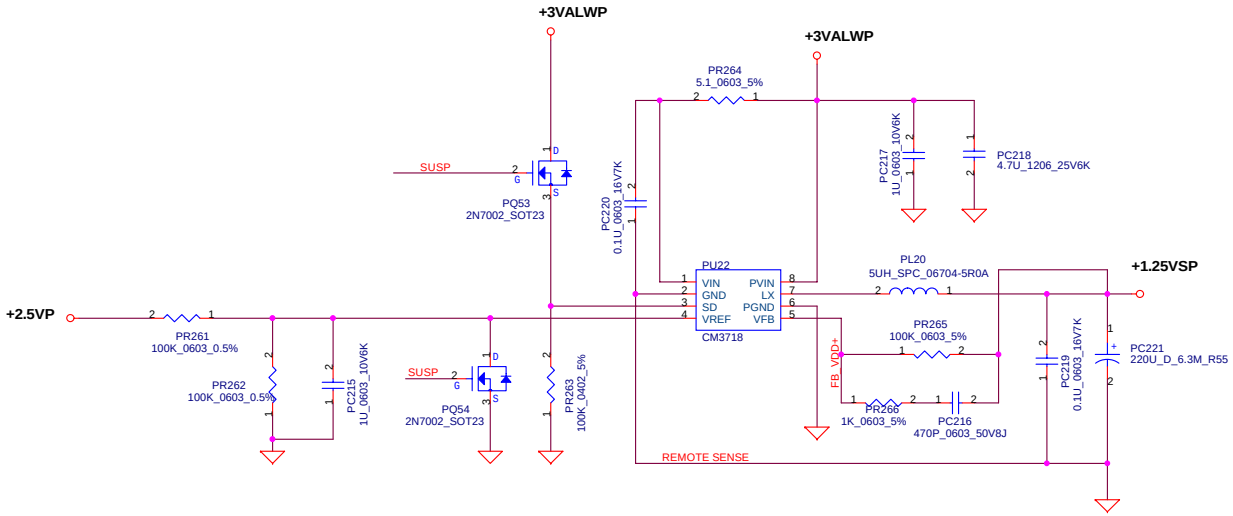

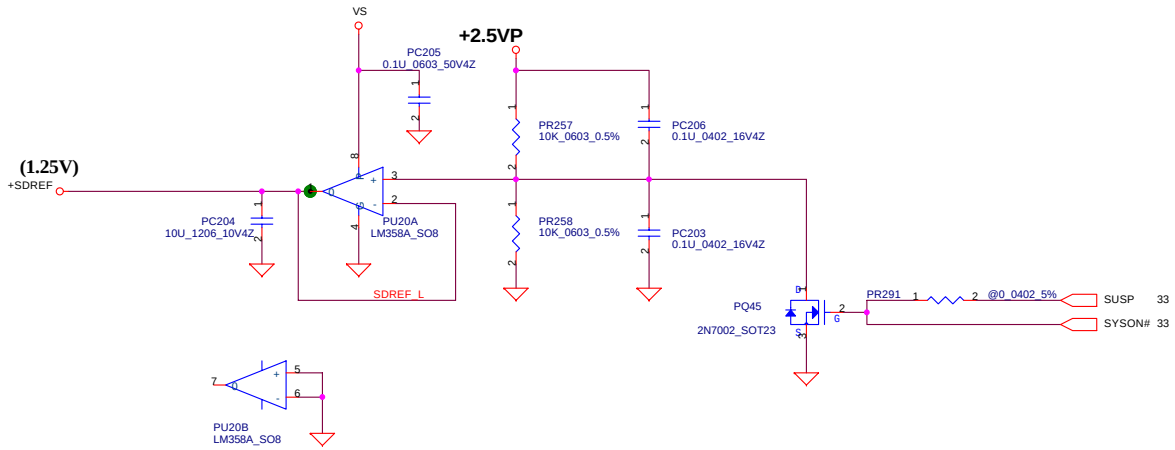

THIS SHEET OF ENGINEERING DRAWING IS THE PROPRIETARY PROPERTY OF COMPAL ELECTRONICS, INC. AND CONTAINS CONFIDENTIAL AND TRADE SECRET INFORMATION. THIS SHEET MAY NOT BE TRANSFERED FROM THE CUSTODY OF THE COMPETENT DIVISION OF R&D DEPARTMENT EXCEPT AS AUTHORIZED BY COMPAL ELECTRONICS, INC. NEITHER THIS SHEET NOR THE INFORMATION IT CONTAINS

Compal Electronics, Inc.

Title: **SCHEMATIC, M/B LA-1991**

Size | Document Number | Rev

Date: 星期五, 九月 05, 2003 | Sheet 39 of 45

CPU-CORE

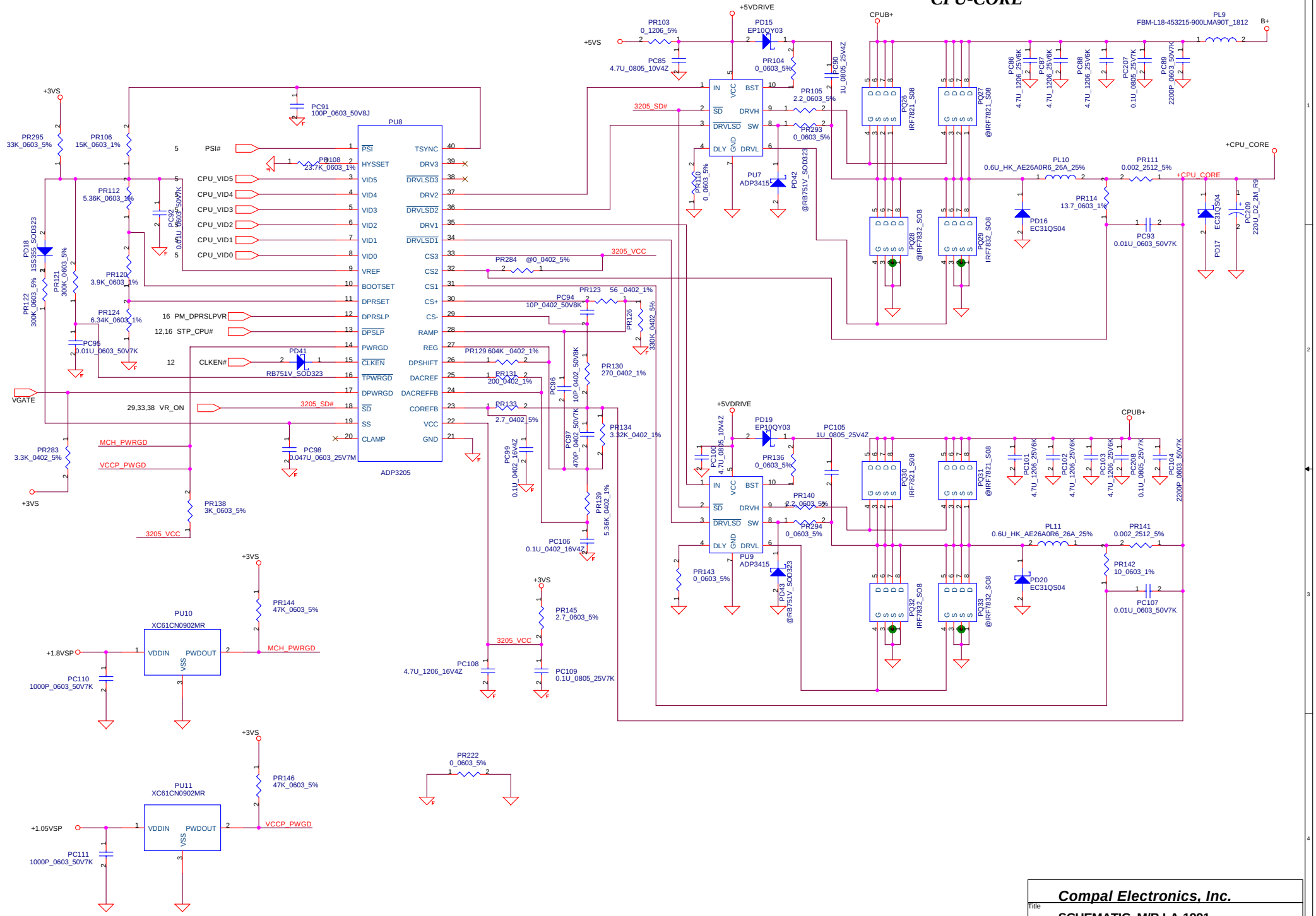

THIS SHEET OF ENGINEERING DRAWING IS THE PROPRIETARY PROPERTY OF COMPAL ELECTRONICS, INC. AND CONTAINS CONFIDENTIAL AND TRADE SECRET INFORMATION. THIS SHEET MAY NOT BE TRANSFERED FROM THE CUSTODY OF THE COMPETENT DIVISION OF R&D DEPARTMENT EXCEPT AS AUTHORIZED BY COMPAL ELECTRONICS, INC. NEITHER THIS SHEET NOR THE INFORMATION IT CONTAINS MAY BE USED BY OR DISCLOSED TO ANY THIRD PARTY WITHOUT PRIOR WRITTEN CONSENT OF COMPAL ELECTRONICS, INC.

Compal Electronics, Inc.

Title: **SCHEMATIC, M/B LA-1991**

Size	Document Number	Rev
B		

Date: 星期五, 九月 05, 2003 Sheet 40 of 45

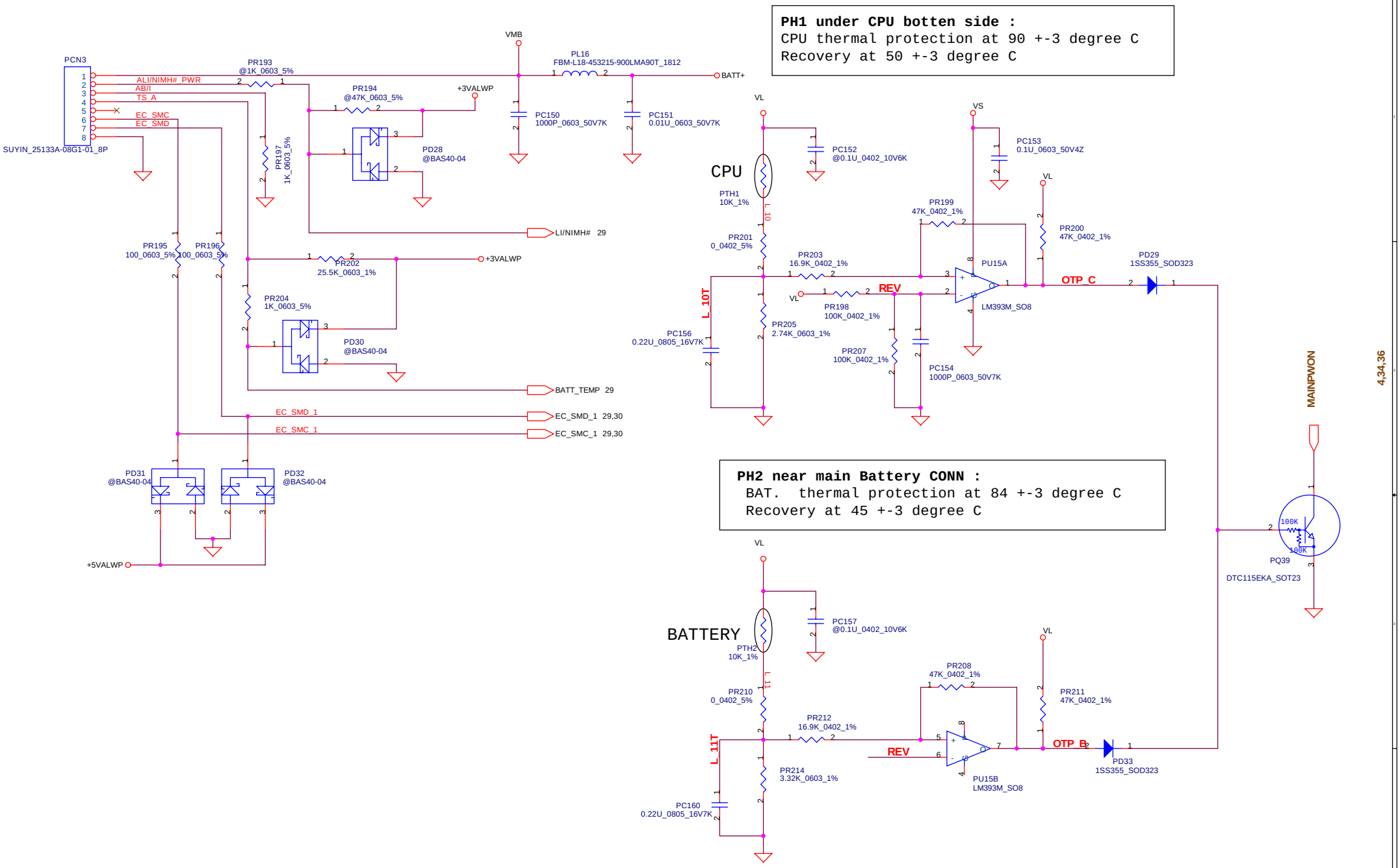

THIS SHEET OF ENGINEERING DRAWING IS THE PROPRIETARY PROPERTY OF COMPAL ELECTRONICS, INC. AND CONTAINS CONFIDENTIAL AND TRADE SECRET INFORMATION. THIS SHEET MAY NOT BE TRANSFERED FROM THE CUSTODY OF THE COMPETENT DIVISION OF R&D DEPARTMENT EXCEPT AS AUTHORIZED BY COMPAL ELECTRONICS, INC. NEITHER THIS SHEET NOR THE INFORMATION IT CONTAINS MAY BE USED BY OR DISCLOSED TO ANY THIRD PARTY WITHOUT PRIOR WRITTEN CONSENT OF COMPAL ELECTRONICS, INC.

Title	SCHEMATIC, M/B LA-1991		
Size B	Document Number 401266		Rev 0.1
Date: 星期五, 九月 05, 2003		Sheet 41 of 45	

A1-TEST 2003/05/28

1. P18 : Add C854 1U_0603
2. P23 : Add C849,C850 1U_0603 for LINEIN
3. P24 : 1. Add Q71 2N7002 for mute sub woofer
   2. Add R839 0_0402 for pass through
   3. C795 change to 0.1U_0603
   4. R809, R810 change to 10K_0402
   5.Add R840,C853,C851,C852,R838 for reserve
4. P25 : Q16 change to SI2302_N for high active signal
5. P29 : Change from NS87591L to KB910
   A. Add R841,R843,R845 0_0402
   B. Add R846,R852,R853,R849,R855,R851 10K_0402
   C. Delete R94 ,R93, R71,R73,R75

A2-TEST 2003/05/28

1. P29 : Remove R841 , Add R71
2. P23 : Add C855,C856= 0.1U_0402

B-regression TEST 2003/09/02

1. P29 : Add C857
2. P31: Add D28

THIS SHEET OF ENGINEERING DRAWING IS THE PROPRIETARY PROPERTY OF COMPAL ELECTRONICS, INC. AND CONTAINS CONFIDENTIAL AND TRADE SECRET INFORMATION. THIS SHEET MAY NOT BE TRANSFERED FROM THE CUSTODY OF THE COMPETENT DIVISION OF R&D DEPARTMENT EXCEPT AS AUTHORIZED BY COMPAL ELECTRONICS, INC. NEITHER THIS SHEET NOR THE INFORMATION IT CONTAINS MAY BE USED BY OR DISCLOSED TO ANY THIRD PARTY WITHOUT PRIOR WRITTEN CONSENT OF COMPAL ELECTRONICS, INC.

THIS SHEET OF ENGINEERING DRAWING IS THE PROPRIETARY PROPERTY OF COMPAL ELECTRONICS, INC. AND CONTAINS CONFIDENTIAL AND TRADE SECRET INFORMATION. THIS SHEET MAY NOT BE TRANSFERED FROM THE CUSTODY OF THE COMPETENT DIVISION OF R&D DEPARTMENT EXCEPT AS AUTHORIZED BY COMPAL ELECTRONICS, INC. NEITHER THIS SHEET NOR THE INFORMATION IT CONTAINS

Compal Electronics, Inc.

Title	SCHEMATIC, M/B LA-1991	
Size	Document Number 401266	Rev 1A
Date: 星期五, 九月 05, 2003	Sheet 43 of 45	

REV: 0.2D

1. To change the mute circuitry for SI build.
   a. Connect EAPD (pin U22.47) to JP24.2 and reserve a 0_0402_5% (R431) resistor for testing.
   b. Install R162 (0_0402_5%) and no install R163.
   c. Add R432 (100K_0402_5%) and Q51 (2N7002) to invert EAPD signal for amplifier and mute LED.

REV: 0.2E

1. For EMI requirement.
   Add C204 0.1U_0402_16V4Z
2. To exchange TP and PS2 signals for EC requirement.
3. For cost down plan.
   To exchange the capacitor of C83,C136 from 150U_D2_6.3VM to 100U_6.3V_M.

REV: 0.2F

1. For cost down plan.
   Move audio line-out BLOCK capacitor from TP to MB. To add C565,C566 100U_6.3V_M.
2. For solving audio noise when IR active. (A2C039)
   a. Del C206.
   b. To change C492 from 150U_D2_6.3VM to 10U_1206_6.3V7K.
3. For EMI requirement.
   Add R435~R440 0_0402_5%.

REV: 0.2G

1. For solving power LED signal wrong on PR/APR side.
   a. Add R441 1K_0402_5%.
   b. Q52 2N7002.
2. For solving power button must be pressed twice issue.
   1. Add D27 RB751V.
   2. Add R330 4.7K_0402_5%.
   3. Change R345 from 10K_0402_5% to 100K_0402_5%.
3. Per HPQ requirement to change audio component.
   To change C174 and C201 to 0.022U_0603_25V7K.

REV: 0.2H (For SI gerber)

1. Per HPQ requirement to change audio component.
   To change R427 from 20K_0402_5% to 39.2K_0402_1%.

REV: 0.3 (For SI SMT)

1. Per HPQ requirement to change LED color from BLUE to GREEN.
   a. Change D5,D6,D7,D26 from HSMB-C172_BLUE_0805 to HSMG-C170_GRN_0805.
   b. Change R9,R10,R11,R421 from 140_0402_1% to 330_0402_5%.
2. To improve RTC crystal accuracy.
   Change C190,C203 from 12P_0402_50V8J to 15P_0402_50V8J.

REV: 0.3A (For PV Build)

1. Per HPQ requirement to add FET to shut off power to the Bluethumb module.
   a. Add Q53 SI2301DS.
   b. Add C568 1U_0603_10V6K.
   c. Add C570 0.01U_0402_16V7K.
   d. Add C571 0.1U_0402_16V7K.
   e. Add C569 4.7U_0805_6.3V6K.
   f. Add Q54 2N7002.
   g. Add R442 100K_0402_5%.
   h. Del R424.
   i. Change Q16.2 signal source from Wireless_OFF# to Wireless_OFF.
2. For supporting WLAN and BT devices exist in the same system.
   a. Connect Mini-PCI JP28-36 to Bluethumb JP32-7 using a series resistor of 1K_0402_5% (R72).
   b. Connect Mini-PCI JP28-43 to Bluethumb JP32-6 using a series resistor of 1K_0402_5% (R298).

THIS SHEET OF ENGINEERING DRAWING IS THE PROPRIETARY PROPERTY OF COMPAL ELECTRONICS, INC. AND CONTAINS CONFIDENTIAL AND TRADE SECRET INFORMATION. THIS SHEET MAY NOT BE TRANSFERED FROM THE CUSTODY OF THE COMPETENT DIVISION OF R&D DEPARTMENT EXCEPT AS AUTHORIZED BY COMPAL ELECTRONICS, INC. NEITHER THIS SHEET NOR THE INFORMATION IT CONTAINS

Version change list (P.I.R. List)

Power section

Item	Reason for change	PG#	Modify List	Date	B.Ver#
1	ME add a limit area, layout place not enough	38	delete PR6 change PR12 from 0_0603_5% to 0_0402_5% change PR15 from 10K_0603_1% to 10K_0402_1%	2003.06.18	
2	Customer request change adapter. The Vin voltage changed to 18V(minimum). So, we need to change Vin detector and Pre-charge detector	34	change PR170 from 100K_0603_1% to 73.2K_0603_1% change PR172 from 39K_0603_1% to 40.2K_0603_1% change PR187 from 732K_0603_1% to 768K_0603_1% change PR189 from 402K_0603_1% to 453K_0603_1%	2003.06.23	
3	For common parts design		change PR166 from 1M_0603_1% to 1M_0402_1% change PR184 from 2M_0603_5% to 2N_0402_5% change capacitor from 4.7U_1210_25V to 4.7U_1206_25V of all location (PC62,PC63,PC74,PC76,PC77,PC38,PC39, PC45,PC46,PC172,PC173,PC178,PC179,PC3,PC4,PC9, PC10,PC86,PC87,PC88,PC101,PC102,PC103,PC48,PC33, PC218) change PC164 and PC149 from SE035475Z07 to SE142475K00	2003.07.16	
4	delete unnecessary 0ohm resister		delete PR247,PR19,PR109,PR113,PR115,PR116,PR117,PR118, PR107,PR125,PR127,PR132,PR135,PR137,PR254,PR79, PR260,PR292,PR119	2003.07.16	
5	adjust Vin detector	34	change PR170 from 73.2K_0603_1% to 22K_0603_1% change PR172 from 40.2K_0603_1% to 36K_0603_1% change PR167 from 84.5K_0603_1% to 82.5K_0603_1%	2003.07.21	
6	adjust PACIN voltage from 3.3V to 3.2V	34	change PR168 from 8.2K_0805_5% to 10K_0805_1%	2003.9.01	
7	EMI test failure	40	change PR105 and PR140 from 0_0603_5% to 2.2_0603_5%	2003.9.01	

THIS SHEET OF ENGINEERING DRAWING IS THE PROPRIETARY PROPERTY OF COMPAL ELECTRONICS, INC. AND CONTAINS CONFIDENTIAL AND TRADE SECRET INFORMATION. THIS SHEET MAY NOT BE TRANSFERED FROM THE CUSTODY OF THE COMPETENT DIVISION OF R&D DEPARTMENT EXCEPT AS AUTHORIZED BY COMPAL ELECTRONICS, INC. NEITHER THIS SHEET NOR THE INFORMATION IT CONTAINS MAY BE USED BY OR DISCLOSED TO ANY THIRD PARTY WITHOUT PRIOR WRITTEN CONSENT OF COMPAL ELECTRONICS, INC.

www.s-manuals.com